TOHATSU PORTABLE FIRE PUMPS

PARTS LIST

V20D2S. V20D2

#3001～

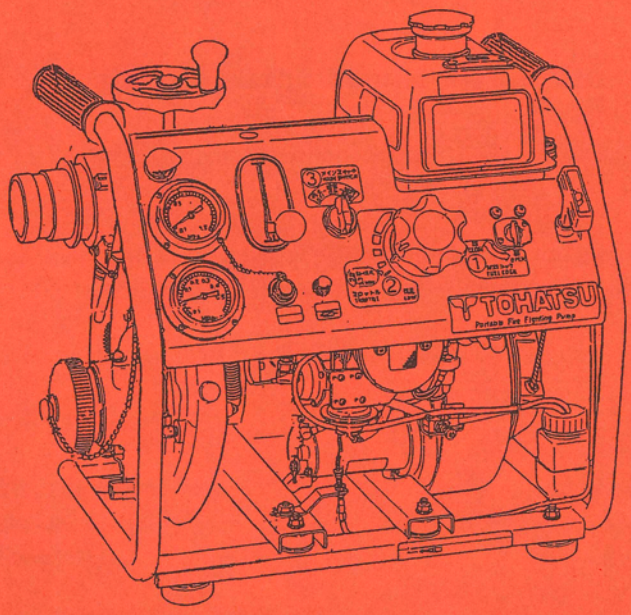

トーハツ株式会社

TOHATSU CORPORATION

Address: 5-4, 3-chome, Azusawa, Itabashi-ku, TOKYO, 174-0051 JAPAN

Phone: TOKYO (03) 3966-3115

Fax: TOKYO (03) 3966-2951

002-22025-0

03.12.200(M)

パーツリストのご使用について

1.このパーツリストは、トーハツ消防ポンプを構成している部品を収録したものです。

2.部品の新設、廃止または、変更が生じた場合は、インフォメーション等にてお知らせ致しますので、その都度、ご訂正ください。

3.アッセンブリまたは、キットでの販売部品は、その構成する部品名の頭に ＊ 印をつけて表しています。

4.本文中に記載されている記号は、次の様になっています。

S タイプ	:セルスタートタイプ	AR	:必要に応じて選択
M タイプ	:マニュアルスタートタイプ	OPT	:オプション
Ass'y	:アッセンブリ		

HOW TO USE THIS PART LIST

1. This Parts List contains the component parts of the Tohatsu Fire-Fighting Pumps.

2. Please keep the Parts List updated each time when receiving the Service Bulletin describing the addition, abolition and/or change of parts.

3. Given mark in ＊ to description shows assembly or kit part.

4. Marks in this Parts List show:

S Type	:Electric Start Type	AR	:As required
M Type	:Manual Starter Type	OPT	:Optional Parts
Ass'y	:Assembly		

目　次
CONTENTS

		page
Fig. 1	ﾋﾟｽﾄﾝ・ｸﾗﾝｸｼｬﾌﾄ・ｼﾘﾝﾀﾞ PISTON・CRANK SHAFT・CYLINDER	1
Fig. 2	ｸﾗﾝｸｹｰｽ CRANK CASE	3
Fig. 3	ｷｬﾌﾞﾚﾀ CARBURETOR	5
Fig. 4	ﾏﾌﾗ・ﾌｧﾝｹｰｽ MUFFLER・FAN CASE	9
Fig. 5	ﾏｸﾞﾈﾄ MAGNETO	11
Fig. 6	ｴﾚｸﾄﾘｯｸｽﾀｰﾀ ELECTRIC STARTER	13
Fig. 7	ﾘｺｲﾙｽﾀｰﾀ RECOIL STARTER	15
Fig. 8	ﾌｭｴﾙﾀﾝｸ FUEL TANK	17
Fig. 9	ｶﾞﾊﾞﾅ・ｽﾛｯﾄﾙ GOVERNOR・THROTTLE	19
Fig. 10	ｺﾝﾄﾛｰﾙﾊﾟﾈﾙ CONTROL PANEL	23
Fig. 11	ﾎﾟﾝﾌﾟｹｰｽ PUMP CASE	25
Fig. 12	ﾊﾞｷｭｰﾑﾎﾟﾝﾌﾟ VACUUM PUMP	27
Fig. 13	ﾃﾞｨｽﾁｬｰｼﾞﾊﾞﾙﾌﾞ式放水弁 DISCHRGE VALVE CHAMBER	33
Fig. 14	ﾌﾚｰﾑ FRAME	35
Fig. 15	ﾗﾍﾞﾙ LABEL	37
Fig. 16	付属品 ATTACHMENTS	39

ピストン・クランクシャフト・シリンダ

Fig. 1 PISTON・CRANK SHAFT・CYLINDER

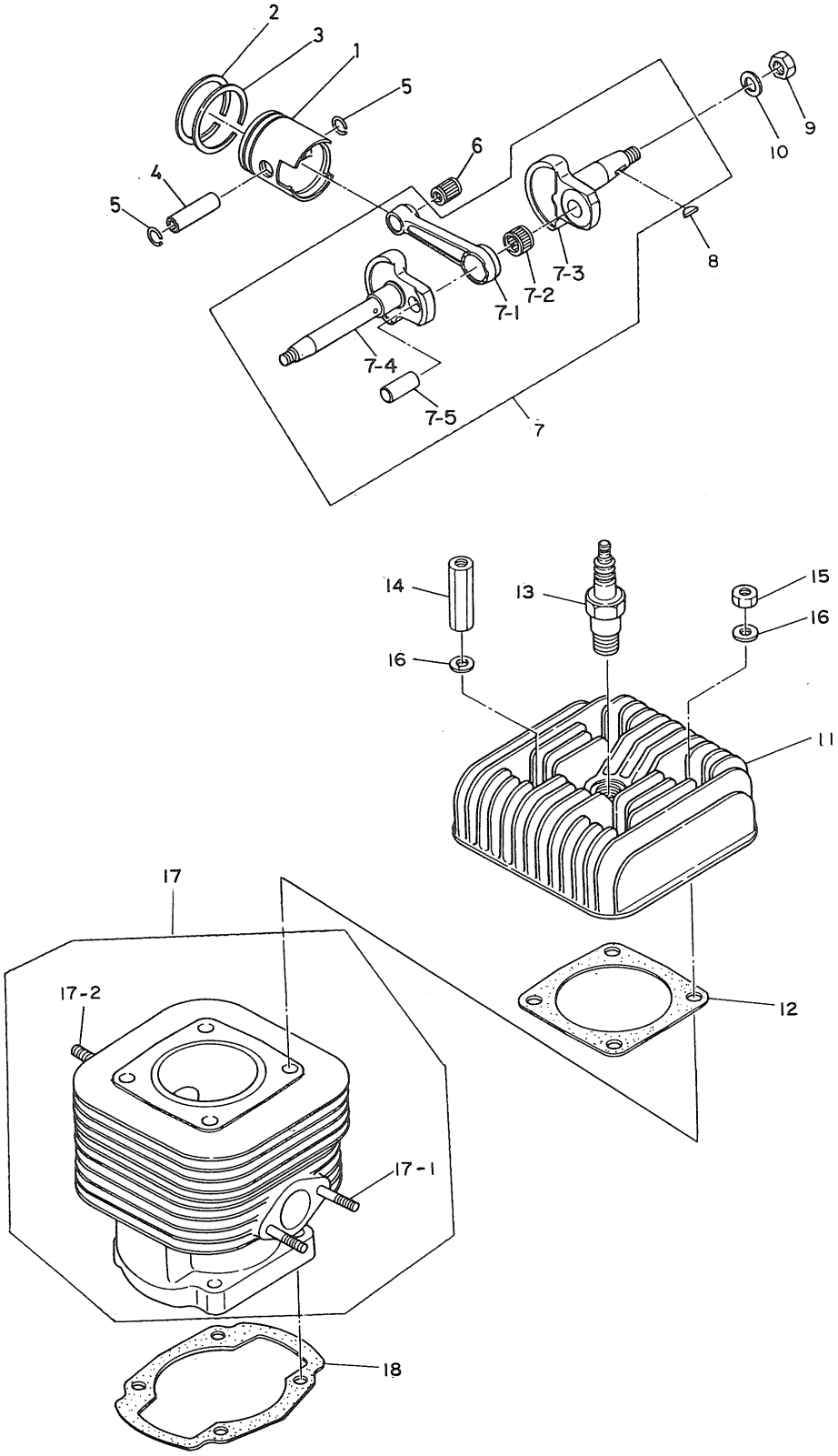

見出番号 Ref. No.	部品番号 Part No.	部　品　名 Description	個数 Q'ty S type	 M type	備　考 Remarks
1-1	128-00001-1	ﾋﾟｽﾄﾝ (Std) Piston (Std)	1	1	
1-2	128-00011-0	ﾋﾟｽﾄﾝ ﾘﾝｸﾞ 1st Piston Ring 1st	1	1	
1-3	336-00011-0	ﾋﾟｽﾄﾝ ﾘﾝｸﾞ 2nd Piston Ring 2nd	1	1	
1-4	3C8-00021-0	ﾋﾟｽﾄﾝﾋﾟﾝ Piston Pin	1	1	
1-5	334-00024-1	ｸﾘｯﾌﾟ、ﾋﾟｽﾄﾝﾋﾟﾝ Clip, Piston Pin	2	2	
1-6	151-00042-0	ﾆｰﾄﾞﾙﾍﾞｱﾘﾝｸﾞ、17-21-25 Needle Bearing, 17-21-25	1	1	
1-7	1F2-00050-0	ｸﾗﾝｸｼｬﾌﾄ Crank Shaft	1	1	
1-7-1	336-00040-1	ｺﾈｸﾃｨﾝｸﾞﾛｯﾄﾞ * Connecting Rod	1	1	
1-7-2	336-00043-1	ﾆｰﾄﾞﾙﾍﾞｱﾘﾝｸﾞ、20-28-18 * Needle Bearing, 20-28-18	1	1	
1-7-3	1F2-00031-0	ｸﾗﾝｸｼｬﾌﾄ、ﾏｸﾞﾈﾄｻｲﾄﾞ * Crank Shaft, Magneto Side	1	1	
1-7-4	1F2-00034-0	ｸﾗﾝｸｼｬﾌﾄ、ﾎﾟﾝﾌﾟｻｲﾄﾞ * Crank Shaft, Pump Side	1	1	
1-7-5	334-00061-0	ｸﾗﾝｸﾋﾟﾝ * Crank Pin	1	1	
1-8	658-30061-0	ﾏｸﾞﾈﾄｷｰ Magneto Key	1	1	
1-9	930124-1600	ﾏｸﾞﾈﾄﾅｯﾄ、16P-1.5 Nut Magneto, 16P-1.5	1	1	Right
1-10	941322-1600	ｽﾌﾟﾘﾝｸﾞﾜｯｼｬ Spring Washer	1	1	
1-11	128-01001-0	ｼﾘﾝﾀﾞﾍｯﾄﾞ Cylinder Head	1	1	
1-12	128-01005-0	ｼﾘﾝﾀﾞﾍｯﾄﾞｶﾞｽｹｯﾄ Gasket, Cylinder Head	1	1	
1-13	9701-1-1004	ｽﾊﾟｰｸﾌﾟﾗｸﾞ Spark Plug	1	1	NGK B7HS
1-14	128-01603-0	ｼﾘﾝﾀﾞﾅｯﾄ A Nut "A", Cylinder	2	2	
1-15	930121-0800	ｼﾘﾝﾀﾞﾅｯﾄ B Nut "B", Cylinder	2	2	
1-16	345-01015-0	ﾜｯｼｬ、8.5-19.5-3.2 Washer, 8.5-19.5-3.2	4	4	
1-17	1D7-01600-0	ｼﾘﾝﾀﾞ Cylinder	1	1	# 0423～
1-17-1	915321-0825	ｽﾀｯﾄﾞﾎﾞﾙﾄ * Stud Bolt	2	2	for Carburetor
1-17-2	915324-0820	ｽﾀｯﾄﾞﾎﾞﾙﾄ * Stud Bolt	2	2	for Muffler
1-18	128-01601-0	ｼﾘﾝﾀﾞｶﾞｽｹｯﾄ Gasket, Cylinder	1	1	

クランクケース

Fig. 2 CRANK CASE

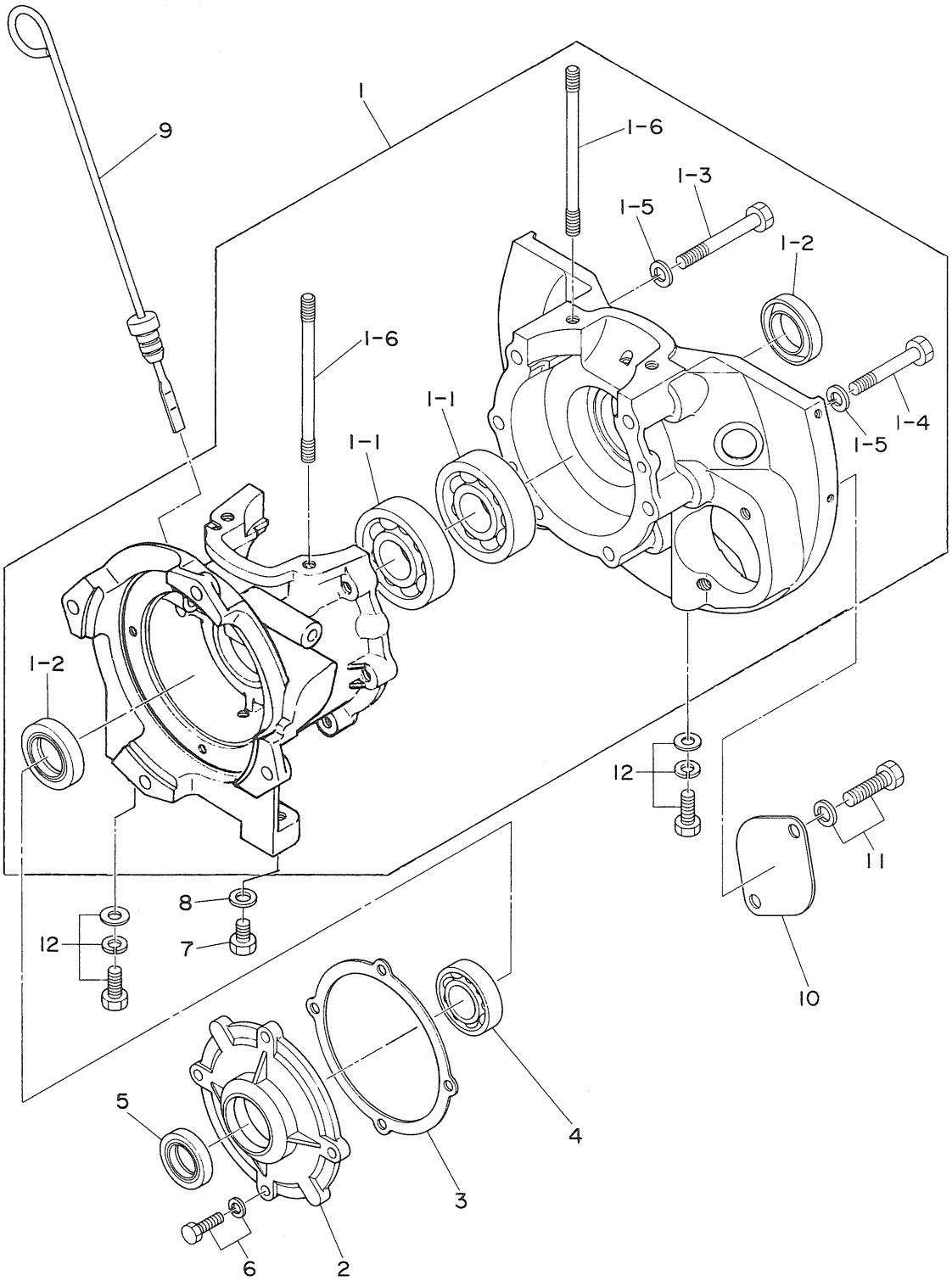

見出番号 Ref. No.	部品番号 Part No.	部　品　名 Description	個数 Q'ty S type	 M type	備　考 Remarks
2-1	1K7-01790-0	ｸﾗﾝｸｹｰｽ Crank Case	1	1	
2-1-1	9601-3-6305	ﾒｲﾝﾍﾞｱﾘﾝｸﾞ、6305 * Main Bearing, 6305	2	2	
2-1-2	334-00122-0	ｵｲﾙｼｰﾙ、25-40-8 * Oil Seal, 25-40-8	2	2	
2-1-3	910124-0860	ﾎﾞﾙﾄ * Bolt	2	2	
2-1-4	910124-0850	ﾎﾞﾙﾄ * Bolt	4	4	
2-1-5	940121-0800	ﾜｯｼｬ * Washer	6	6	
2-1-6	128-01602-0	ｽﾀｯﾄﾞﾎﾞﾙﾄ * Stud Bolt	4	4	
2-2	128-07000-0	ﾘｯﾄﾞ、ｶﾞﾊﾞﾅｹｰｽ Lid, Governor Case	1	1	
2-3	128-07001-0	ｶﾞｽｹｯﾄ、ｶﾞﾊﾞﾅｹｰｽﾘｯﾄﾞ Gasket, Governor Case Lid	1	1	
2-4	9601-0-6004	ﾎﾞｰﾙﾍﾞｱﾘﾝｸﾞ、6004 Ball Bearing, 6004	1	1	
2-5	101-00121-0	ｵｲﾙｼｰﾙ、20-35-7 Oil Seal, 20-35-7	1	1	
2-6	910121-7620	ﾎﾞﾙﾄ Bolt	4	4	
2-7	910121-0812	ﾎﾞﾙﾄ Bolt	1	1	
2-8	151-07021-0	ｶﾞｽｹｯﾄ、8.2-15-1 Gasket, 8.2-15-1	1	1	
2-9	151-07018-0	ｵｲﾙｹﾞｰｼﾞ Oil Gauge	1	1	
2-10	1D7-06309-0	ｶﾊﾞｰ、ｾﾙｽﾀｰﾀｹｰｽ Cover, Starter Case	—	1	
2-11	910121-7814	ﾎﾞﾙﾄ Bolt	—	2	
2-12	910121-7820	ﾎﾞﾙﾄ Bolt	4	4	

キャブレタ

Fig. 3 CARBURETOR

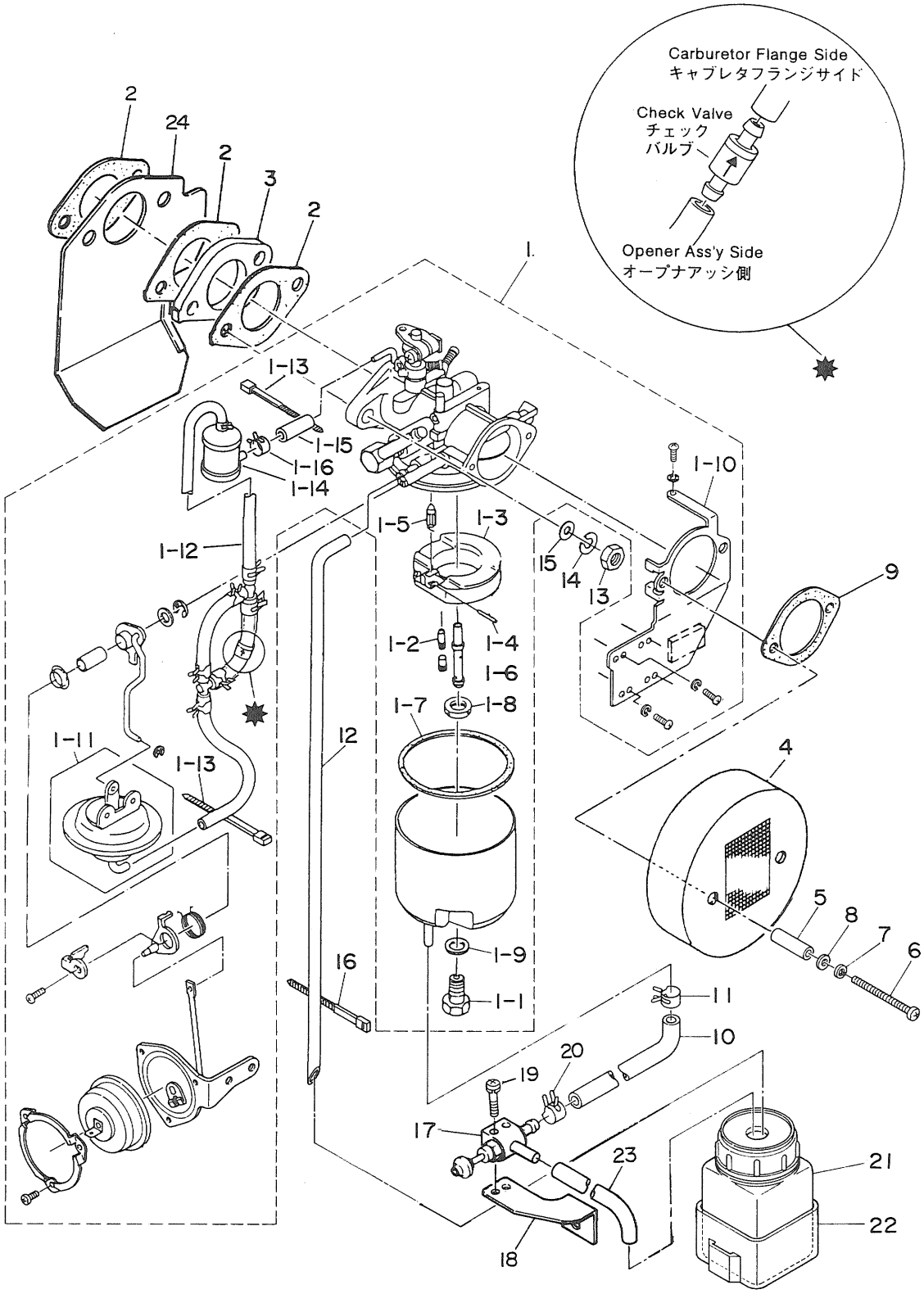

見出番号 Ref. No.	部品番号 Part No.	部　品　名 Description	個数 Q'ty S type	 M type	備　考 Remarks
3-1	1D7-03009-2	ｷｬﾌﾞﾚﾀ Carburetor	1	1	
3-1-1	1C4-03051-0	ﾒｲﾝｼﾞｪｯﾄ # 116 * Main Jet # 116	1	1	
3-1-2	128-03645-0	ｽﾛｰｼﾞｪｯﾄ # 65 * Slow Jet # 65	1	1	
3-1-3	151-03031-0	ﾌﾛｰﾄ * Float	1	1	
3-1-4	151-03032-0	ﾋﾟﾝ、ﾌﾛｰﾄﾋﾝｼﾞ * Pin, Float Hinge	1	1	
3-1-5	1C4-03040-0	ﾌﾛｰﾄﾊﾞﾙﾌﾞ * Float Valve	1	1	
3-1-6	1C4-03052-0	ﾒｲﾝﾉｽﾞﾙ * Main Nozzle	1	1	
3-1-7	151-03022-0	ｶﾞｽｹｯﾄ、ﾌﾛｰﾄﾁｬﾝﾊﾞｰ * Gasket, Float Chamber	1	1	
3-1-8	128-03026-0	ｽﾍﾟｰｻ、ﾒｲﾝｼﾞｪｯﾄ * Spacer, Main Jet	1	1	
3-1-9	103-03025-0	ｶﾞｽｹｯﾄ、ﾒｲﾝｼﾞｪｯﾄ * Gasket, Main Jet	1	1	
3-1-10	1C4-03007-0	ﾎﾙﾀﾞ * Holder	1	1	
3-1-11	1A6-03015-0	ｵｰﾌﾟﾅ * Opener	1	1	
3-1-12	1C4-03016-2	ﾊﾞｷｭｰﾑﾊﾟｲﾌﾟ * Vacuum Pipe	1	1	
3-1-13	353-84398-0	ﾊﾞﾝﾄﾞ、ﾘｰﾄﾞﾜｲﾔ 100 * Band, Lead Wire 100	2	2	
3-1-14	1F2-01140-0	ﾁｬﾝﾊﾞ、ﾁｪｯｸﾊﾞﾙﾌﾞ * Chamber, Check Valve	1	1	
3-1-15	98AB-3-0035	ｺﾞﾑﾊﾟｲﾌﾟ * Rubber Pipe	1	1	
3-1-16	369-70098-0	ｸﾘｯﾌﾟ、6.8 * Clip, 6.8	2	2	
3-2	126-02011-0	ｶﾞｽｹｯﾄ、ｷｬﾌﾞﾚﾀ Gasket, Carburetor	3	3	
3-3	126-02013-0	ｲﾝｼｭﾚｰﾀ Insulator	1	1	
3-4	634-02601-0	ｴｱｸﾘｰﾅ Air Cleaner	1	1	
3-5	128-02605-1	ｽﾍﾟｰｻ、6-8-28.5 Spacer, 6-8-28.5	2	2	
3-6	921521-0642	ｽｸﾘｭ Screw	2	2	
3-7	941322-0600	ｽﾌﾟﾘﾝｸﾞﾜｯｼｬ Spring Washer	2	2	
3-8	940121-0600	ﾜｯｼｬ Washer	2	2	
3-9	152-02606-0	ｴｱｸﾘｰﾅｶﾞｽｹｯﾄ Gasket, Air Cleaner	1	1	
3-10	1F2-35078-0	ﾌｭｴﾙﾊﾟｲﾌﾟ Fuel Pipe	1	1	
3-11	178-01639-0	ﾎｰｽｸﾗﾝﾌﾟ 10 Hose Clump 10	1	1	
3-12	1F2-03201-0	ｵｰﾊﾞｰﾌﾛｰﾊﾟｲﾌﾟ、ｷｬﾌﾞﾚﾀ Over Flow Pipe, Carburetor	1	1	
3-13	930221-0800	ﾅｯﾄ Nut	2	2	
3-14	941322-0800	ｽﾌﾟﾘﾝｸﾞﾜｯｼｬ Spring Washer	2	2	

キャブレタ

Fig. 3 CARBURETOR

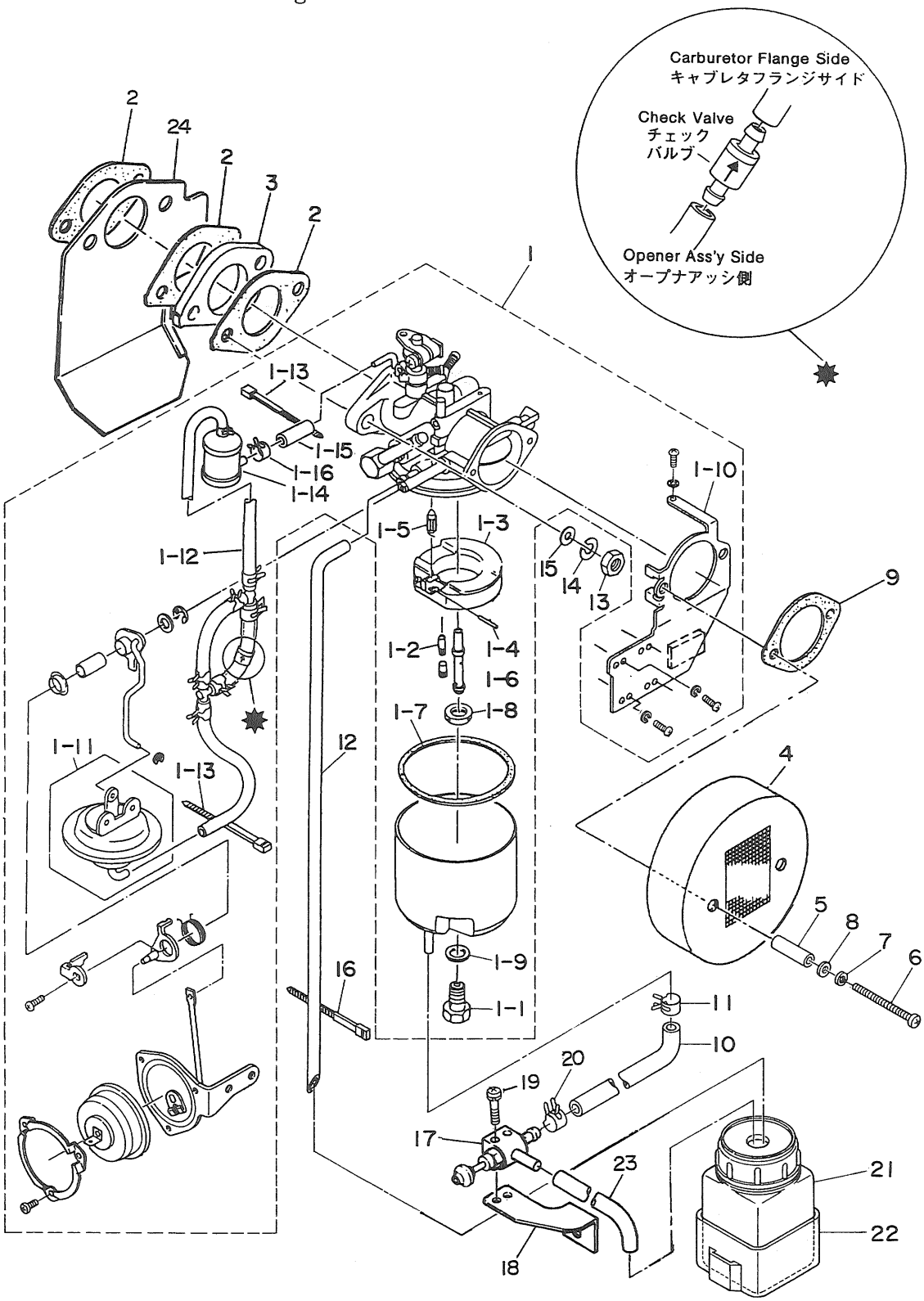

見出番号 Ref. No.	部品番号 Part No.	部　品　名 Description	個数 Q'ty S type	 M type	備　考 Remarks
3-15	940121-0800	ﾜｯｼｬ Washer	2	2	
3-16	353-84398-0	ﾊﾞﾝﾄﾞ、ﾘｰﾄﾞﾜｲﾔ 100 Band, Lead Wire 100	1	1	
3-17	180-03060-2	ﾄﾞﾚﾝﾊﾞﾙﾌﾞ、ｷｬﾌﾞﾚﾀ Drain Valve, Carburetor	1	1	
3-18	1F2-03062-0	ﾌﾞﾗｹｯﾄ、ﾄﾞﾚﾝﾊﾞﾙﾌﾞ Bracket, Drain Valve	1	1	
3-19	921521-6420	ｽｸﾘｭ Screw	2	2	
3-20	121-35143-0	ｸﾘｯﾌﾟ、9.5 Clip, 9.5	1	1	
3-21	1D7-03064-0	ﾎﾟｯﾄ、ﾄﾞﾚﾝﾊﾞﾙﾌﾞ Pot, Drain Valve	1	1	
3-22	180-03065-0	ﾊﾞﾝﾄﾞ、ﾎﾟｯﾄ Band, Pot	1	1	
3-23	9908-5-0240	ﾋﾞﾆｰﾙﾊﾟｲﾌﾟ Vinyl Pipe	1	1	
3-24	1F2-03545-0	ﾌﾟﾚｰﾄ、ｷｬﾌﾞﾚﾀ Plate, Carburetor	1	1	

マフラ・ファンケース

Fig. 4 MUFFLER・FAN CASE

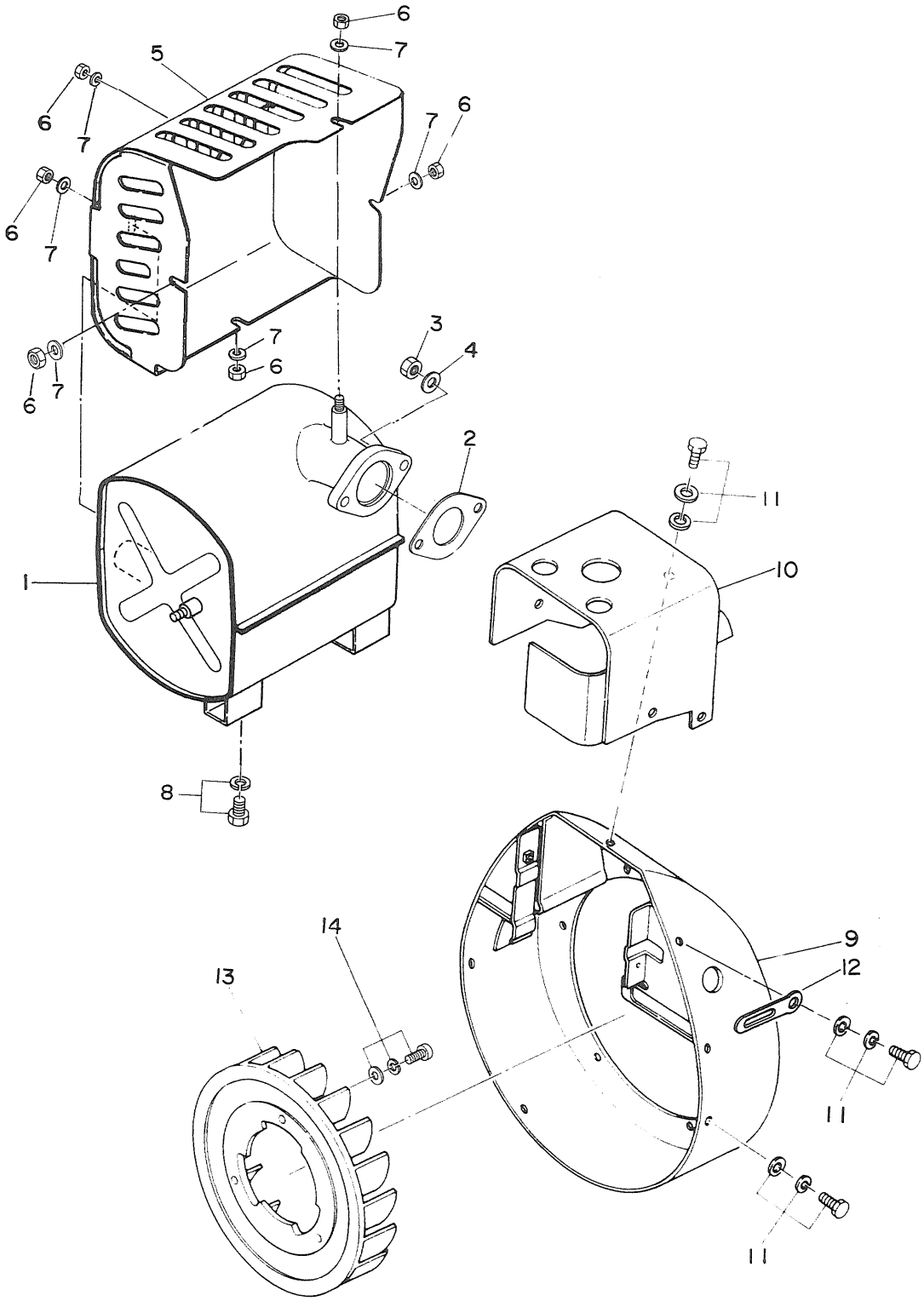

見出番号 Ref. No.	部品番号 Part No.	部　品　名 Description	個数 Q'ty S type	 M type	備　考 Remarks
4-1	1F2-02340-0	ﾏﾌﾗ Muffler	1	1	
4-2	122-02321-0	ｶﾞｽｹｯﾄ、ﾏﾌﾗ Gasket, Muffler	1	1	
4-3	930121-0800	ﾅｯﾄ Nut	2	2	
4-4	940121-0800	ﾜｯｼｬ Washer	2	2	
4-5	1F2-02342-0	ｶﾊﾞｰ、ﾏﾌﾗ Cover, Muffler	1	1	
4-6	930121-0600	ﾅｯﾄ Nut	6	6	
4-7	940121-0600	ﾜｯｼｬ Washer	6	6	
4-8	910121-5812	ﾎﾞﾙﾄ Bolt	2	2	
4-9	128-08041-2	ﾌｧﾝｹｰｽ Fan Case	1	1	
4-10	128-08044-0	ｶﾊﾞｰ、ｼﾘﾝﾀﾞ Cover, Cylinder	1	1	
4-11	910121-7612	ﾎﾞﾙﾄ Bolt	12	12	
4-12	398-06972-0	ｸﾗﾝﾌﾟ、6.5-67P Clamp, 6.5-67P	2	2	
4-13	128-08001-1	ﾌｧﾝ Fan	1	1	
4-14	921521-7616	ｽｸﾘｭ Screw	3	3	

マグネト
Fig. 5 MAGNETO

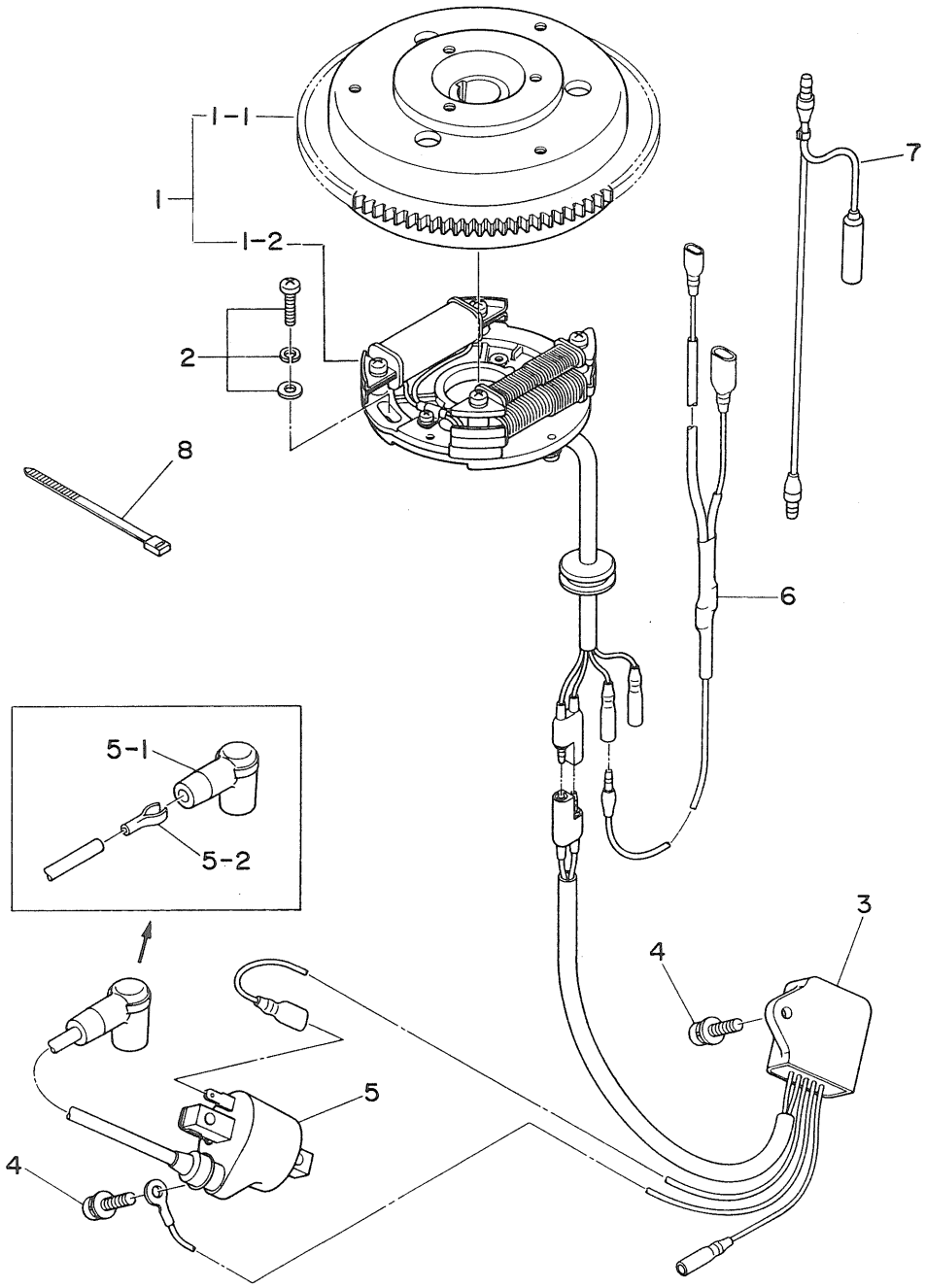

見出番号 Ref. No.	部品番号 Part No.	部　品　名 Description	個数 Q'ty S type	 M type	備　考 Remarks
5-1	1D7-06000-0	ﾏｸﾞﾈﾄｱｯｼ Magneto Ass'y	1	(1)	( ) is same as S-type
5-1-1	1D7-06008-0	ﾌﾗｲﾎｲﾙ * Flywheel	1	(1)	( ) is same as S-type
5-1-2	1D7-06002-0	ｺｲﾙﾌﾟﾚｰﾄｱｯｼ * Coil Plate Ass'y	1	1	
5-2	921521-7520	ｽｸﾘｭ Screw	2	2	
5-3	1D7-06060-0	C. D. ﾕﾆｯﾄ C. D. Unit	1	1	
5-4	921521-7620	ｽｸﾘｭ Screw	3	3	
5-5	1D7-06055-0	ｲｸﾞﾆｯｼｮﾝｺｲﾙ Ignition Coil	1	1	
5-5-1	3B2-06291-0	ﾌﾟﾗｸﾞｷｬｯﾌﾟ * Plug Cap	1	1	
5-5-2	3B2-06926-0	ﾀｰﾐﾅﾙ、ﾌﾟﾗｸﾞｷｬｯﾌﾟ * Terminal, Plug Cap	1	1	
5-6	1A6-34070-0	ﾚｸﾁﾌｧｲﾔ Rectifier	1	1	
5-7	1D7-34126-0	ｺｰﾄﾞ、ﾊﾞｯﾃﾘﾁｬｰｼﾞ Cord, Battery Charge	1	1	
5-8	353-84398-0	ﾊﾞﾝﾄﾞ、ﾘｰﾄﾞﾜｲﾔ 100 Cord, Battery Charge	2	2	

エレクトリックスタータ

Fig. 6 ELECTRIC STARTER

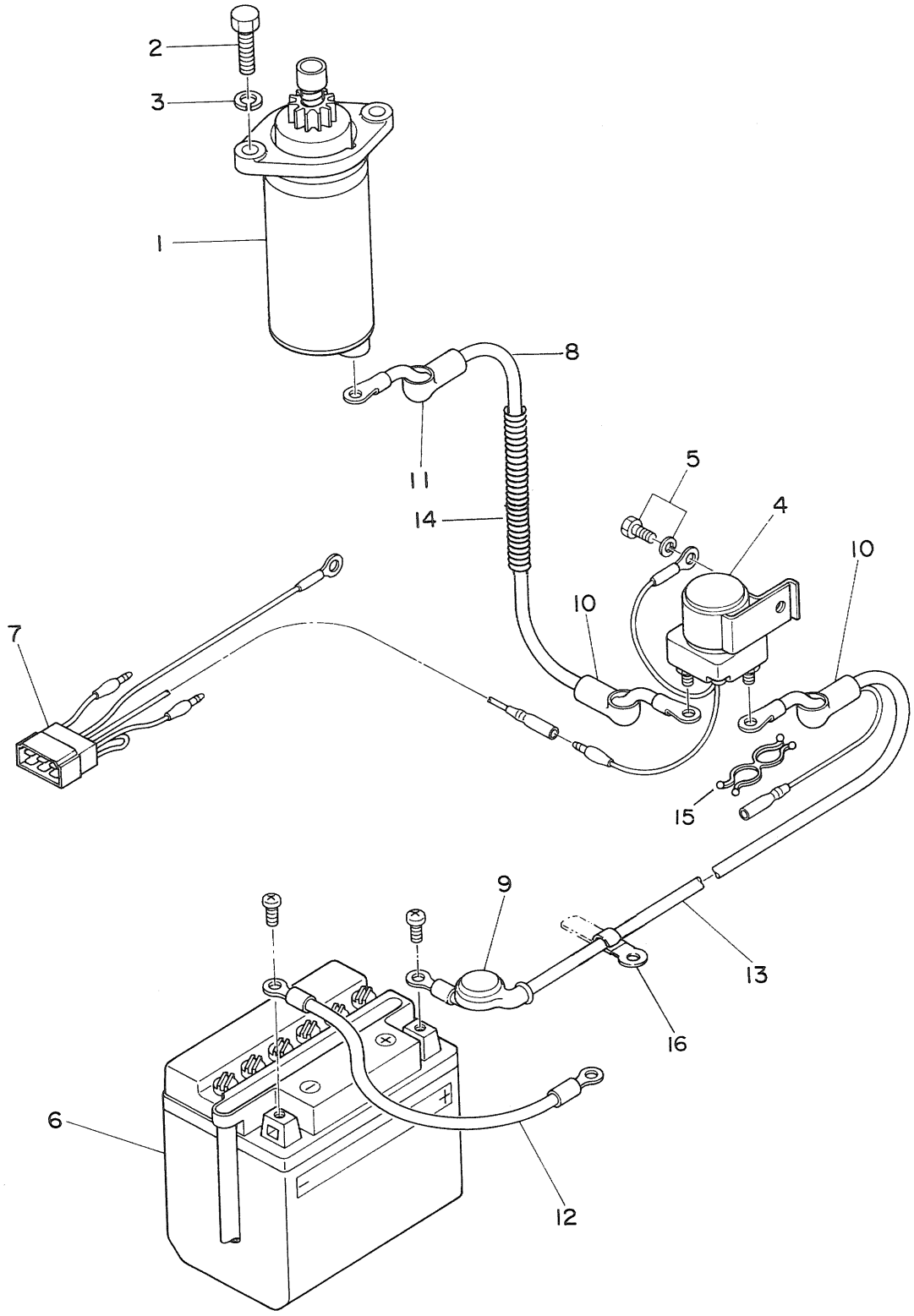

見出番号 Ref. No.	部品番号 Part No.	部　品　名 Description	個数 Q'ty S type	 M type	備　考 Remarks
6-1	1F2-76010-1	ｽﾀｰﾀﾓｰﾀ Starter Motor	1	—	
6-2	916103-0830	ﾎﾞﾙﾄ Bolt	2	—	
6-3	941322-0800	ｽﾌﾟﾘﾝｸﾞﾜｯｼｬ Spring Washer	2	—	
6-4	346-76040-0	ｽﾀｰﾀｿﾚﾉｲﾄﾞ Starter Solenoid	1	—	
6-5	910121-6612	ﾎﾞﾙﾄ Bolt	1	—	
6-6	1D7-06310-0	ﾊﾞｯﾃﾘ Battery	1	—	FB 14L-A2
6-7	1D7-34103-0	ﾒｲﾝﾜｲﾔﾊｰﾈｽ Main Wire Harness	1	—	
6-8	1F2-34102-0	ｾﾙｽﾀｰﾀｺｰﾄﾞ Electric Starter Cord	1	—	Red L=320
6-9	151-34137-0	ｷｬｯﾌﾟ、ｺｰﾄﾞ Cap, Cord	1	—	
6-10	3B7-76145-0	ｷｬｯﾌﾟ、ｺｰﾄﾞ Cap, Cord	2	—	
6-11	3A3-76145-0	ｷｬｯﾌﾟ、ｺｰﾄﾞ Cap, Cord	1	—	
6-12	1F8-34101-0	ﾊﾞｯﾃﾘｱｰｽｺｰﾄﾞ Ground Cable	1	—	Black L=250
6-13	1F2-34105-0	ﾊﾞｯﾃﾘｺｰﾄﾞ（＋） Battery Cable (＋)	1	—	Red L=480
6-14	1F2-34114-0	ｺﾙｹﾞｰﾄﾁｭｰﾌﾞ Corrugated Tube	1	—	
6-15	346-06916-0	ｸﾘｯﾌﾟ、ﾊｲﾃﾝｼｮﾝｺｰﾄﾞ Clip, High Tension Cord	1	—	
6-16	309-06972-0	ｸﾗﾝﾌﾟ、6.5-47.5 Clamp, 6.5-47.5	4	—	

リコイルスタータ

Fig. 7 RECOIL STARTER

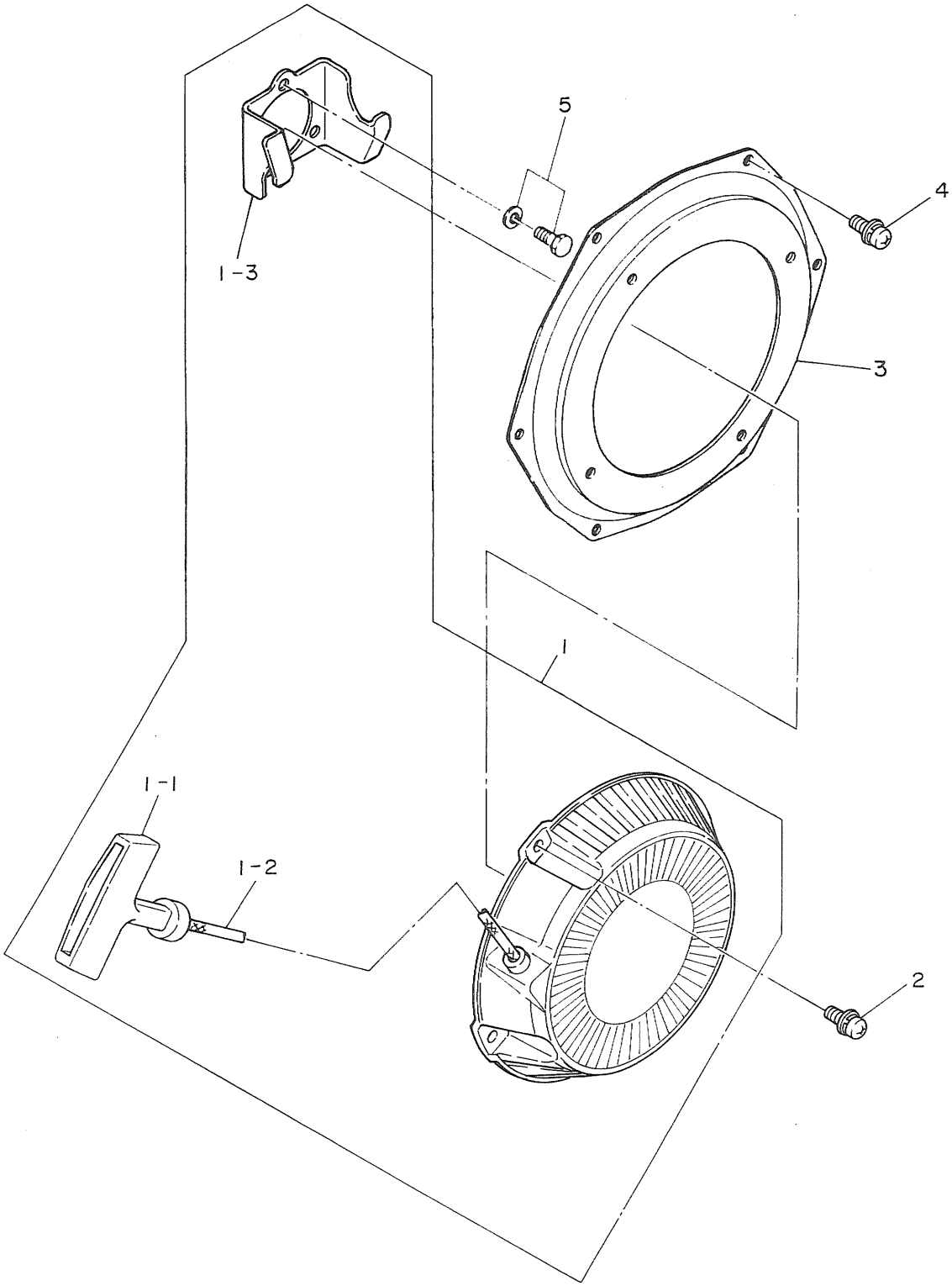

見出番号 Ref. No.	部品番号 Part No.	部　品　名 Description	個数 Q'ty S type	 M type	備　考 Remarks
7-1	1F2-05050-0	ﾘｺｲﾙｽﾀｰﾀ Recoil Starter	1	1	
7-1-1	1F2-05019-0	ﾊﾝﾄﾞﾙ * Starter Handle	1	1	
7-1-2	1F2-05013-1	ﾛｰﾌﾟ * Starter Rope	1	1	
7-1-3	1F2-05901-0	ﾌﾟｰﾘ * Starter Pulley	1	1	
7-2	921521-5614	ｽｸﾘｭ Screw	4	4	
7-3	1F2-05001-0	ﾌﾞﾗｹｯﾄ、ｽﾀｰﾀ Bracket, Starter	1	1	
7-4	921521-7512	ｽｸﾘｭ Screw	6	6	
7-5	910121-6612	ﾎﾞﾙﾄ Bolt	3	3	

フュエルタンク

Fig. 8 FUEL TANK

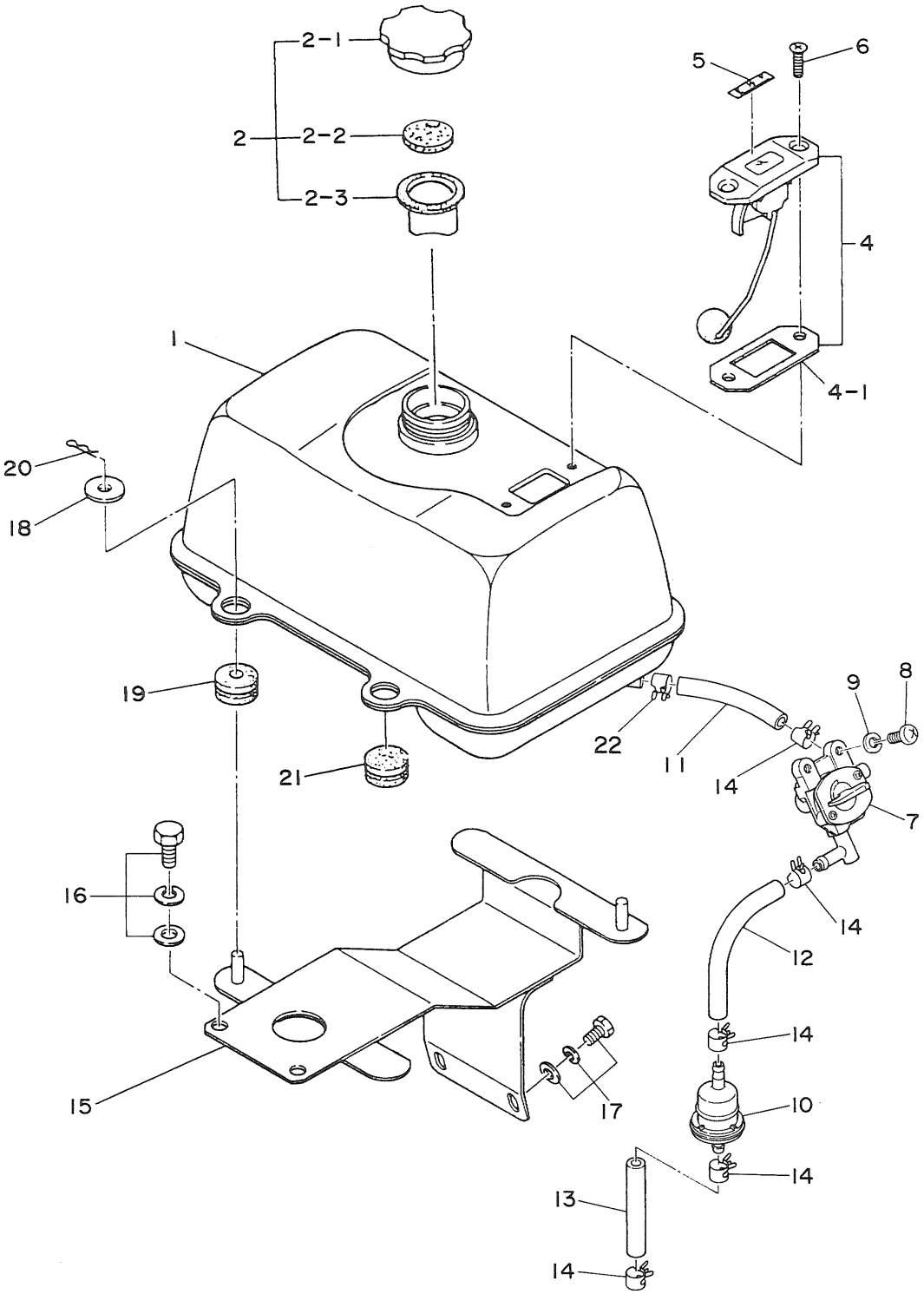

見出番号 Ref. No.	部品番号 Part No.	部　品　名 Description	個数 Q'ty S type	 M type	備　考 Remarks
8-1	1D7-35000-0	ﾌｭｴﾙﾀﾝｸ Fuel Tank	1	1	
8-2	128-35020-0	ﾀﾝｸｷｬｯﾌﾟｱｯｼ Cap Ass'y, Fuel Tank	1	1	
8-2-1	174-35020-1	ﾆｬｯﾌﾟ、ﾌｭｴﾙﾀﾝｸ * Cap, Fuel Tank	1	1	
8-2-2	128-35024-0	ｲﾝﾅｰﾌﾟﾚｰﾄ、ｷｬｯﾌﾟ * Inner Plate, Cap	1	1	
8-2-3	128-35023-0	ｶﾞｽｹｯﾄ、ﾀﾝｸｷｬｯﾌﾟ * Gasket, Fuel Tank Cap	1	1	
8-4	128-35018-0	ﾌｭｴﾙｹﾞｰｼﾞ Fuel Gauge	1	1	
8-4-1	128-35019-0	ｶﾞｽｹｯﾄ、ﾌｭｴﾙｹﾞｰｼﾞ * Gasket, Fuel Gauge	1	1	
8-5	159-35003-0	ﾌｭｴﾙｹﾞｰｼﾞﾌﾟﾚｰﾄ Fuel Gauge Plate	1	1	
8-6	921653-0510	ｽｸﾘｭ Screw	2	2	
8-7	1D7-35200-1	ﾌｭｴﾙｺｯｸ Fuel Cock	1	1	
8-8	921503-0610	ｽｸﾘｭ Screw	2	2	
8-9	940103-0600	ﾜｯｼｬ Washer	2	2	
8-10	369-02230-0	ﾌｭｴﾙﾌｨﾙﾀ Fuel Filter	1	1	
8-11	98AB-5-0065	ｺﾞﾑﾎｰｽ Rubber Hose	1	1	Fuel Tank - Fuel Cock
8-12	98AB-5-0120	ｺﾞﾑﾎｰｽ Rubber Hose	1	1	Fuel Cock - Fuel Filter
8-13	98AB-5-0060	ｺﾞﾑﾎｰｽ Rubber Hose	1	1	Fuel Filter - Carburetor
8-14	121-35143-0	ｸﾘｯﾌﾟ、φ9.5 Clip, φ9.5	5	5	
8-15	128-35040-1	ﾌﾞﾗｹｯﾄ、ﾌｭｴﾙﾀﾝｸ Bracket, Fuel Tank	1	1	
8-16	910121-7820	ﾎﾞﾙﾄ Bolt	2	2	
8-17	910121-7612	ﾎﾞﾙﾄ Bolt	2	2	
8-18	345-05122-0	ﾜｯｼｬ、6.5-23-1.5 Washer, 6.5-23-1.5	2	2	
8-19	126-35063-0	ﾏｳﾝﾄﾗﾊﾞｰ A Mount Rubber "A"	2	2	
8-20	951622-0600	R ﾋﾟﾝ、d=6 R-Pin, d=6	2	2	
8-21	126-35067-0	ﾏｳﾝﾄﾗﾊﾞｰ B Mount Rubber "B"	2	2	
8-22	345-70114-0	ｸﾘｯﾌﾟ、φ11.3 Clip, φ11.3	1	1	

ガバナ・スロットル

Fig. 9 GOVERNOR・THROTTLE

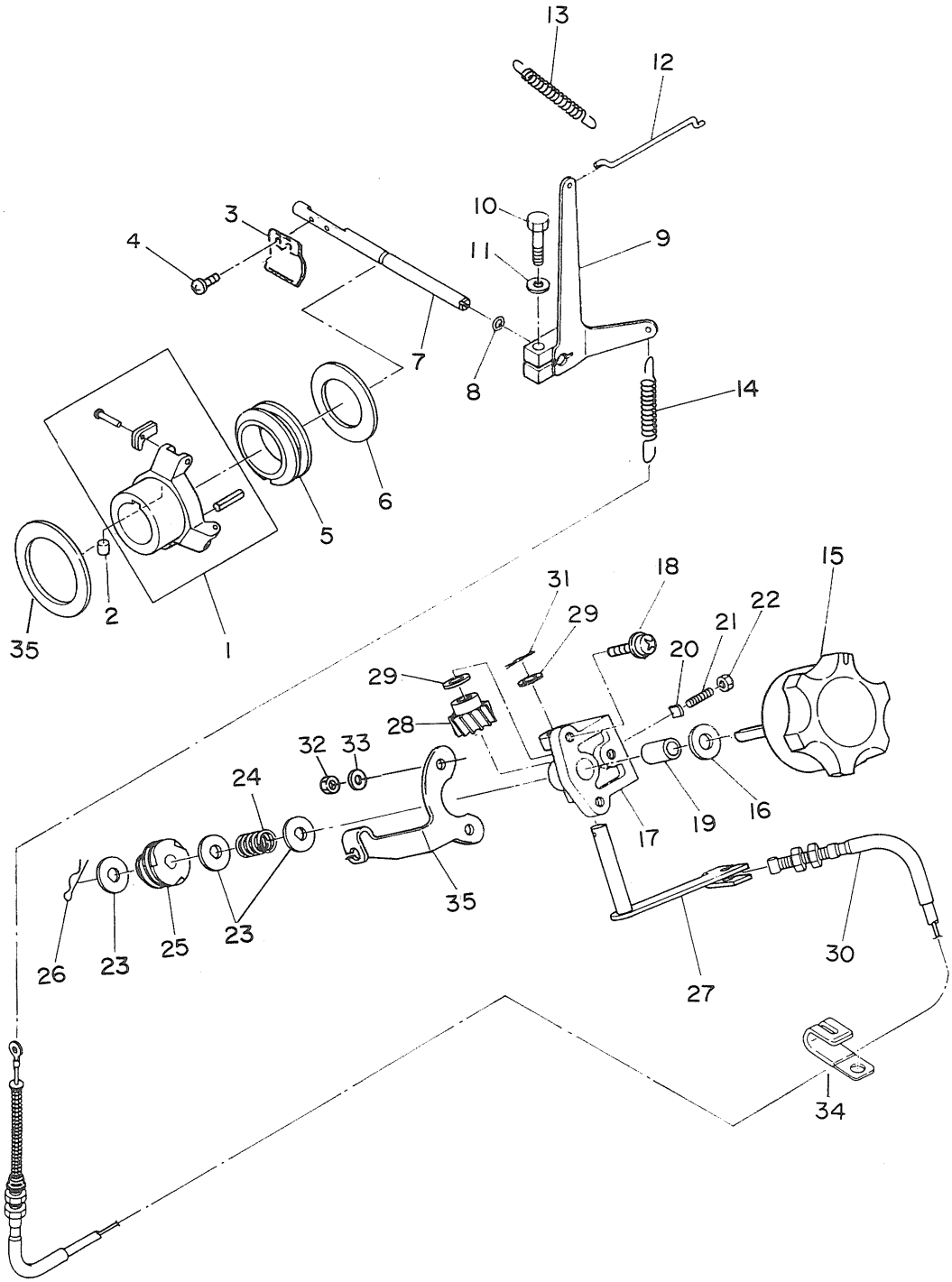

見出番号 Ref. No.	部品番号 Part No.	部　品　名 Description	個数 Q'ty S type	 M type	備　考 Remarks
9-1	1F2-07100-0	ｳｪｲﾄｱｯｼ Weight Ass'y	1	1	
9-2	151-07101-0	ﾉｯｸ、5-5 Knock, 5-5	1	1	
9-3	1F2-07102-0	ｱｰﾑ、ｶﾞﾊﾞﾅ Arm, Governor	1	1	
9-4	921521-6412	ｽｸﾘｭ Screw	2	2	
9-5	1F2-07103-0	ｽﾗｲﾀﾞ Slider	1	1	
9-6	121-07113-0	ﾜｯｼｬ、20.5-30-1 Washer, 20.5-30-1	1	1	
9-7	1F2-07121-0	ｶﾞﾊﾞﾅｼｬﾌﾄ Governor Shaft	1	1	
9-8	151-07122-0	O ﾘﾝｸﾞ、1.5-5.5 O-Ring, 1.5-5.5	1	1	
9-9	1D7-07131-0	ｶﾞﾊﾞﾅﾚﾊﾞｰ Governor Lever	1	1	
9-10	910124-0625	ﾎﾞﾙﾄ Bolt	1	1	
9-11	941322-0600	ｽﾌﾟﾘﾝｸﾞﾜｯｼｬ Spring Washer	1	1	
9-12	1D7-07147-0	ﾛｯﾄﾞ、ｶﾞﾊﾞﾅﾚﾊﾞｰ Rod, Governor Lever	1	1	
9-13	103-07148-0	ｻﾎﾟｰﾄｽﾌﾟﾘﾝｸﾞ Support Spring	1	1	
9-14	1D7-07143-2	ｽﾌﾟﾘﾝｸﾞ、ｶﾞﾊﾞﾅ Spring, Governor	1	1	
9-15	1E0-07410-0	ﾀﾞｲﾔﾙ、ｽﾛｯﾄﾙ Dial, Throttle	1	1	
9-16	174-35064-0	ﾜｯｼｬ、8.5-20-2 Washer, 8.5-20-2	1	1	
9-17	180-07424-0	ﾎﾙﾀﾞ、ｽﾛｯﾄﾙ Holder, Throttle	1	1	
9-18	921521-7612	ｽｸﾘｭ Screw	2	2	
9-19	180-07425-0	ﾌﾞｯｼﾝｸﾞ、8.4-10-19.5 Bushing, 8.4-10-19.5	1	1	
9-20	180-07421-0	ｱｼﾞｬｽﾌﾟﾚｰﾄ Adjust Plate	1	1	
9-21	180-07422-0	ｱｼﾞｬｽﾄｽｸﾘｭ Adjust Screw	1	1	
9-22	930121-0500	ﾅｯﾄ Nut	1	1	
9-23	180-07433-0	ﾜｯｼｬ、ｽﾛｯﾄﾙ Washer, Throttle	3	3	
9-24	180-07434-0	ｽﾌﾟﾘﾝｸﾞ、ｳｵｰﾑ Spring, Warm	1	1	
9-25	180-07431-0	ｳｵｰﾑ、ｽﾛｯﾄﾙ Warm, Throttle	1	1	
9-26	951603-0800	R ﾋﾟﾝ、d=8 R-Pin, d=8	2	2	
9-27	1D7-07427-2	ｺﾈｸﾀ、ｶﾞﾊﾞﾅ Connector, Governor	1	1	
9-28	180-07436-0	ｳｵｰﾑﾎｲﾙ、ｽﾛｯﾄﾙ Warm Wheel, Throttle	1	1	
9-29	180-07437-0	ﾜｯｼｬ、8.5-14-1 Washer, 8.5-14-1	2	2	
9-30	1F2-07445-0	ﾜｲﾔ、ｽﾛｯﾄﾙ Wire, Throttle	1	1	

ｶﾞﾊﾞﾅ・ｽﾛｯﾄﾙ

Fig. 9 GOVERNOR・THROTTLE

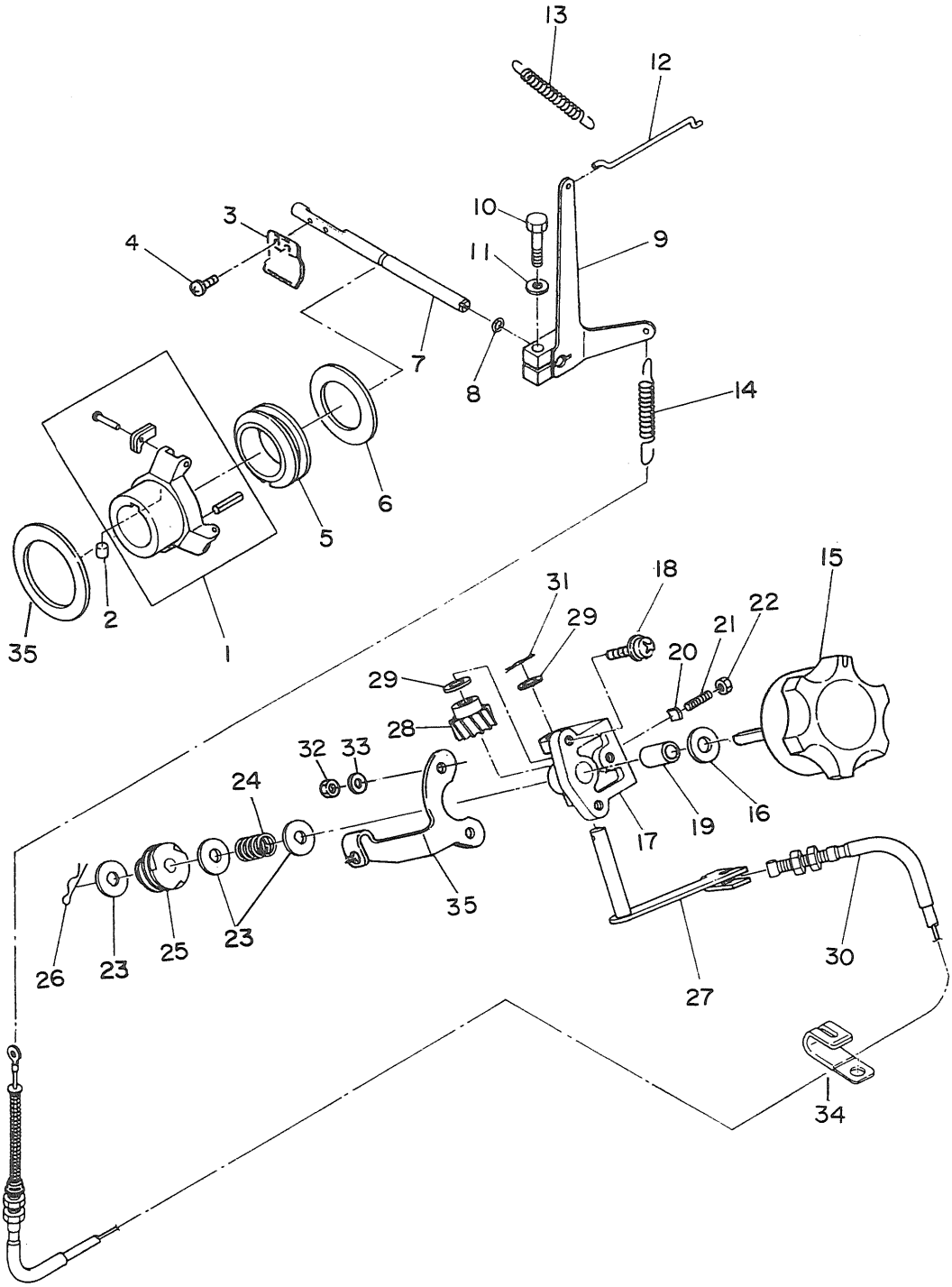

見出番号 Ref. No.	部品番号 Part No.	部　品　名 Description	個数 Q'ty S type	 M type	備　考 Remarks
9-31	951622-0600	Rピン、d=6 R-Pin, d=6	1	1	
9-32	930121-0600	ナット Nut	2	2	
9-33	940121-0600	ワッシャ Washer	2	2	
9-34	345-06971-0	クランプ、9-12U Clamp, 9-12U	1	1	
9-35	1F2-07002-0	ワッシャ、20-34.5-2 Washer, 20-34.5-2	1	1	

コントロールパネル

Fig. 10 CONTROL PANEL

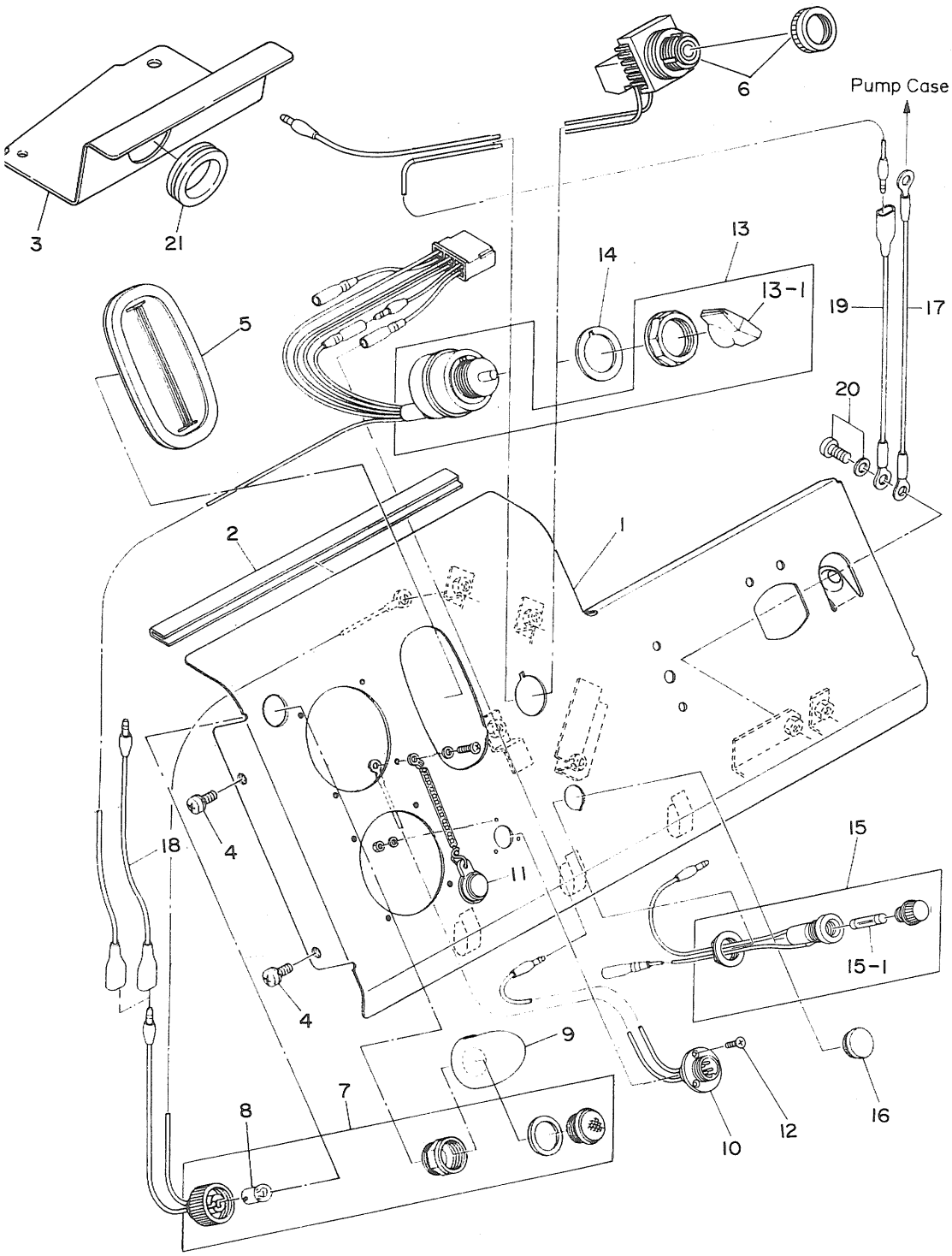

見出番号 Ref. No.	部品番号 Part No.	部　品　名 Description	個数 Q'ty S type	 M type	備　考 Remarks
10-1	1H0-33004-0	ｺﾝﾄﾛｰﾙﾊﾟﾈﾙ Control Panel	1	1	
10-2	1D7-33001-0	ﾗﾊﾞｰ、ｺﾝﾄﾛｰﾙﾊﾟﾈﾙ Rubber, Control Panel	1	1	
10-3	1F2-35042-0	ｽﾃｰ、ｺﾝﾄﾛｰﾙﾊﾟﾈﾙ Stay, Control Panel	1	1	
10-4	921521-7612	ｽｸﾘｭ Screw	4	4	
10-5	1D7-31158-0	ﾗﾊﾞｰ、ﾊﾞｷｭｰﾑﾎﾟﾝﾌﾟﾚﾊﾞｰ Rubber, Vacuum Pump Lever	1	1	
10-6	1H0-34030-0	ｽﾄｯﾌﾟｽｲｯﾁ Stop Switch	—	1	
10-7	159-35021-0	ﾊﾟｲﾛｯﾄﾗﾝﾌﾟ Pilot Lamp	1	1	
10-8	159-34321-0	ﾊﾞﾙﾌﾞ、3.4W Bulb, 3.4W	1	1	
10-9	624-34050-0	ｶﾊﾞｰ、ﾊﾟｲﾛｯﾄﾗﾝﾌﾟ Pilot Lamp	1	1	
10-10	159-34000-1	ｺﾝｾﾝﾄ Plug Receptacle	1	1	
10-11	1D7-34001-0	ｷｬｯﾌﾟ、ｺﾝｾﾝﾄ Cap, Plug Receptacle	1	1	
10-12	921621-2306	ｽｸﾘｭ、2.3-6 Screw, 2.3-6	3	3	
10-13	174-34010-1	ﾒｲﾝｽｲｯﾁ Main Switch	1	—	
10-13-1	174-34011-1	ﾉﾌﾞ、ﾒｲﾝｽｲｯﾁ * knob, Main Switch	1	—	
10-14	174-34012-1	ｼｰﾄﾌﾟﾚｰﾄ、ﾒｲﾝｽｲｯﾁ Seat Plate, Main Switch	1	—	
10-15	1D7-34080-0	ﾋｭｰｽﾞﾎﾞｯｸｽ Fuse Box	1	—	
10-15-1	159-39042-0	ﾋｭｰｽﾞ 5A * Fuse 5A	1	—	
10-16	345-67117-0	ｸﾞﾛﾒｯﾄ、17-2.7 Grommet, 17-2.7	—	1	
10-17	1D7-34112-0	ｱｰｽｺｰﾄﾞ Ground Cable	1	1	Black AV2, L=230
10-18	1D7-34109-0	ﾊﾟｲﾛｯﾄﾗﾝﾌﾟｺｰﾄﾞ Pilot Lamp Cable	—	1	Green AV0.5, L=200
10-19	1D7-34113-0	ｽﾄｯﾌﾟｽｲｯﾁｺｰﾄﾞ Stop Switch Cable	—	1	Black AV0.75, L=200
10-20	921521-6612	ｽｸﾘｭ Screw	1	1	
10-21	1C5-36089-0	ｸﾞﾛﾒｯﾄ、36-1.5 Grommet, 36-1.5	1	1	

ポンプケース

Fig. 11 PUMP CASE

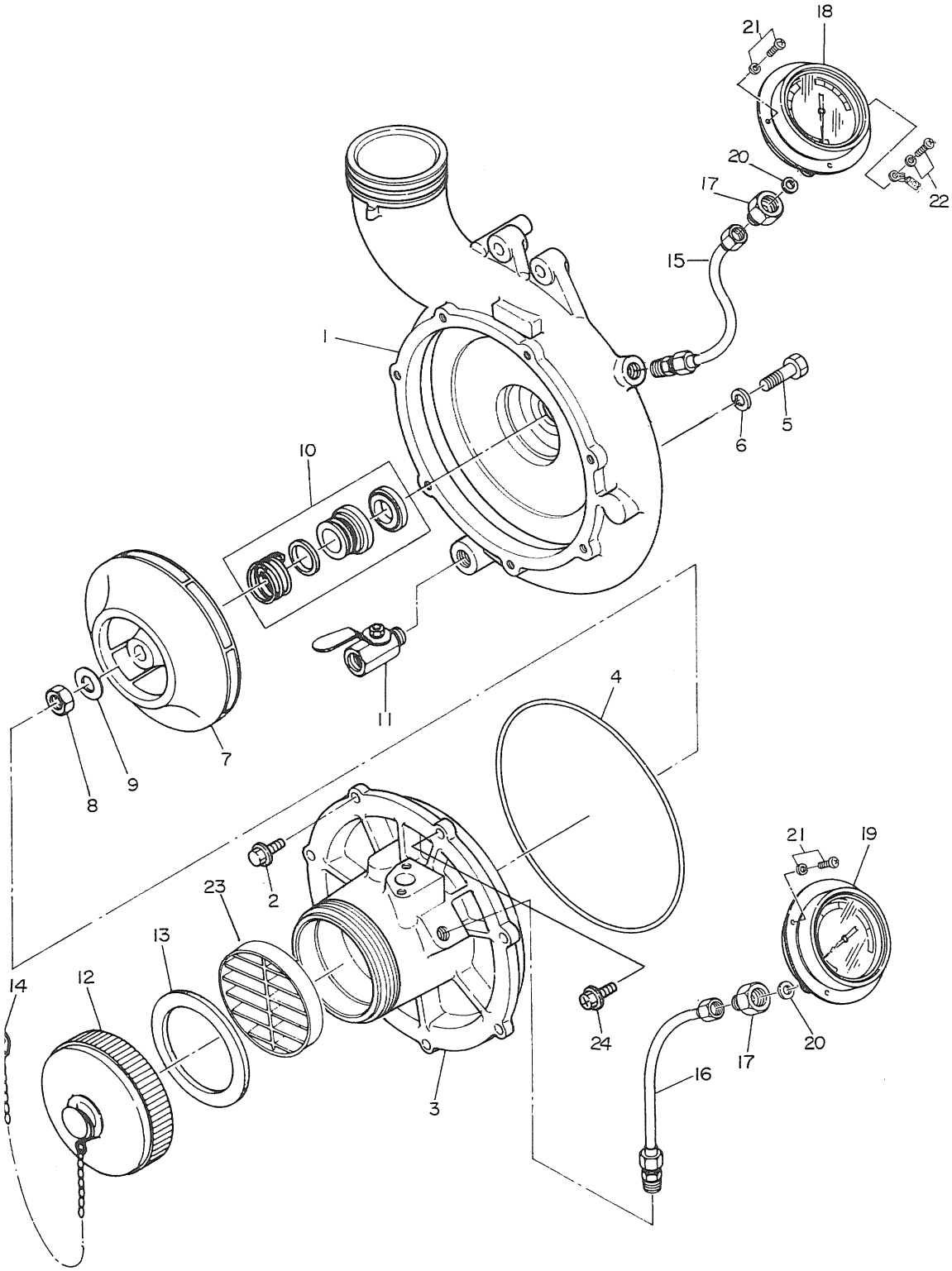

見出番号 Ref. No.	部品番号 Part No.	部　品　名 Description	個数 Q'ty S type	 M type	備　考 Remarks
11-1	1H0-30000-1	ﾎﾟﾝﾌﾟｹｰｽ Pump Case	1	1	
11-2	910121-5620	ﾎﾞﾙﾄ Bolt	6	6	
11-3	1H0-30020-2	ﾎﾟﾝﾌﾟｶﾊﾞｰ Pump Cover	1	1	
11-4	101-30021-0	O ﾘﾝｸﾞ、3.1-147 O-Ring, 3.1-147	1	1	
11-5	910121-0825	ﾎﾞﾙﾄ Bolt	4	4	
11-6	940121-0800	ﾜｯｼｬ Washer	4	4	
11-7	1H0-30040-0	ｲﾝﾍﾟﾗ Impeller	1	1	
11-8	931126-1000	ﾅｯﾄ、10P-1.25 Nut, 10P-1.25	1	1	
11-9	940103-1000	ﾜｯｼｬ Washer	1	1	
11-10	121-30071-0	ﾒｶﾆｶﾙｼｰﾙ Mechanical Seal	1	1	
11-11	6B3-30001-0	ﾎﾞｰﾙｺｯｸ、1/4 Ball Cock, 1/4	1	1	
11-12	121-30141-0	ｷｬｯﾌﾟｻｸｼｮﾝｱｲ Cap, Suction Opening	1	1	
11-13	121-30142-0	ｶﾞｽｹｯﾄ、63-82-4 Gasket, 63-82-4	1	1	
11-14	151-30143-0	ﾁｪｰﾝ、ｷｬｯﾌﾟ Chain, Cap	1	1	
11-15	1F2-33140-1	ﾊﾟｲﾌﾟ、ﾌﾟﾚｯｼｬｹﾞｰｼﾞ Pipe, Pressure Gauge	1	1	
11-16	1F2-33142-0	ﾊﾟｲﾌﾟ、ﾊﾞｷｭｰﾑｹﾞｰｼﾞ Pipe, Vacuum Gauge	1	1	
11-17	1D7-33115-0	ｱﾀﾞﾌﾟﾀ、ｹﾞｰｼﾞ Adapter, Gauge	2	2	
11-18	659-33110-1	ﾌﾟﾚｯｼｬｹﾞｰｼﾞ、1.5Mpa Pressure Gauge, 1.5Mpa	1	1	
11-19	659-33120-1	ﾊﾞｷｭｰﾑｹﾞｰｼﾞ、0.6Mpa Vacuum Gauge, 0.6Mpa	1	1	
11-20	151-33159-0	ｶﾞｽｹｯﾄ、6.2-11-1 Gasket, 6.2-11-1	2	2	
11-21	921521-6306	ｽｸﾘｭ Screw	7	7	
11-22	921521-6310	ｽｸﾘｭ Screw	1	1	
11-23	128-30151-0	ｻｸｼｮﾝﾎｰｽｽﾄﾚｰﾅ Suction Hose Strainer	1	1	
11-24	910421-5618	ﾎﾞﾙﾄ Bolt	1	1	

バキュームポンプ
Fig. 12 VACUUM PUMP

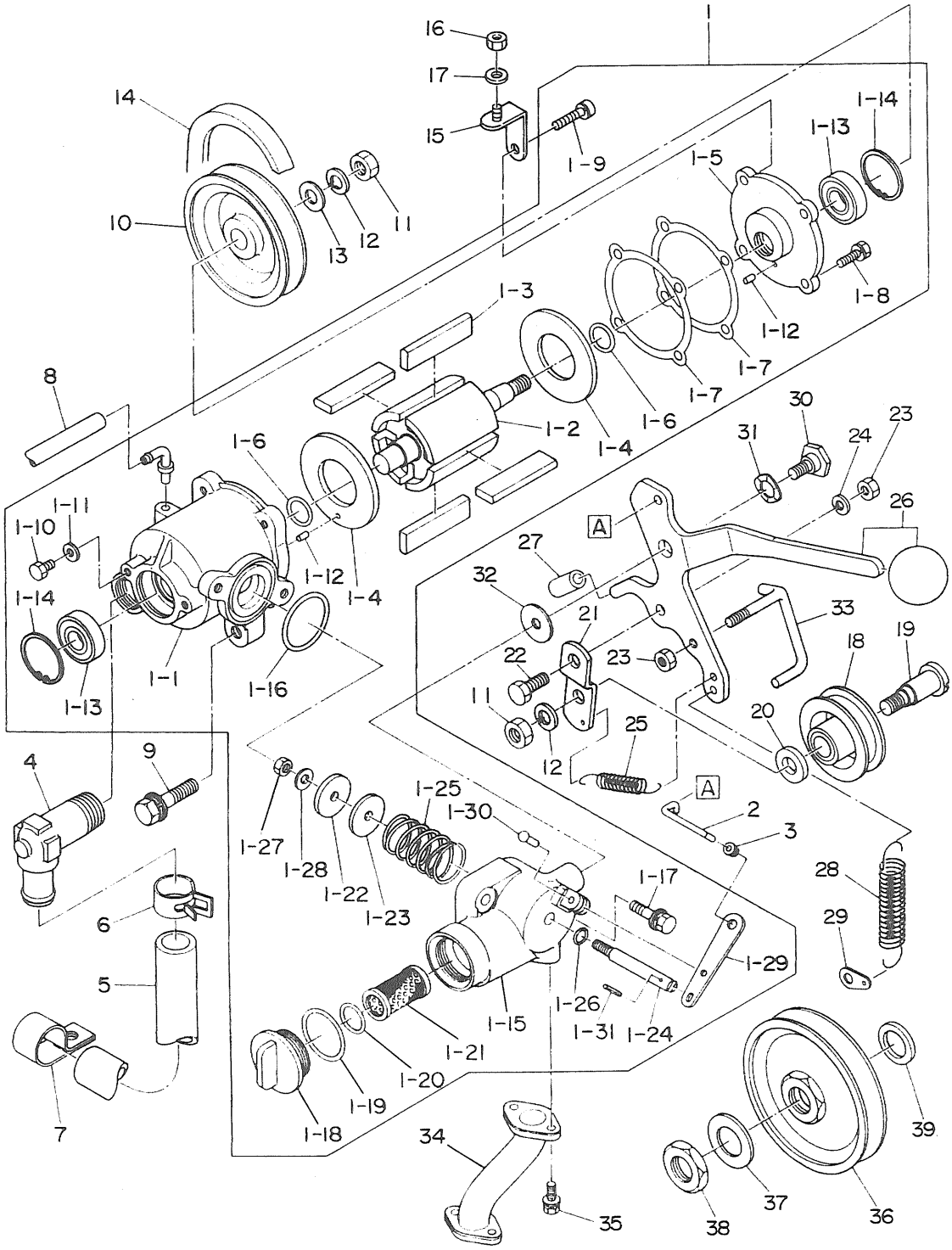

見出番号 Ref. No.	部品番号 Part No.	部　品　名 Description	個数 Q'ty S type	 M type	備　考 Remarks
12-1	1D7-31000-1	ﾊﾞｷｭｰﾑﾎﾟﾝﾌﾟ Vacuum Pump	1	1	
12-1-1	699-31091-0	ﾀｰｽ、ﾊﾞｷｭｰﾑﾎﾟﾝﾌﾟ * Case, Vacuum Pump	1	1	
12-1-2	699-31040-0	ﾛｰﾀ * Rotor	1	1	
12-1-3	699-31041-0	ﾍﾞｰﾝ * Vane	4	4	
12-1-4	699-31045-0	ｻｲﾄﾞﾌﾟﾚｰﾄ * Side Plate	2	2	
12-1-5	699-31094-0	ｶﾊﾞｰ、ﾊﾞｷｭｰﾑﾎﾟﾝﾌﾟ * Cover, Vacuum Pump	1	1	
12-1-6	151-31021-0	O ﾘﾝｸﾞ、2.4-13.8 * O-Ring, 2.4-13.8	2	2	
12-1-7	699-31037-0	ｶﾞｽｹｯﾄ、ﾊﾞｷｭｰﾑﾎﾟﾝﾌﾟ * Gasket, Vacuum Pump	AR	AR	t=0.03
	699-31039-0	ｶﾞｽｹｯﾄ、ﾊﾞｷｭｰﾑﾎﾟﾝﾌﾟ * Gasket, Vacuum Pump	AR	AR	t=0.06
12-1-8	910121-5516	ﾎﾞﾙﾄ * Bolt	3	3	
12-1-9	910121-5520	ﾎﾞﾙﾄ * Bolt	1	1	
12-1-10	910103-0508	ﾎﾞﾙﾄ * Bolt	2	2	
12-1-11	680-31098-0	ｶﾞｽｹｯﾄ、5.2-10-1 * Gasket, 5.2-10-1	2	2	
12-1-12	951103-0306	ﾉｯｸ、3-6 * Knock, 3-6	2	2	
12-1-13	680-31048-0	ﾍﾞｱﾘﾝｸﾞ、12-28-8 * Bearing, 12-28-8	2	2	
12-1-14	945003-2800	C ﾘﾝｸﾞ、d=28 * C-Ring, d=28	2	2	
12-1-15	699-31600-0	ｲﾝﾚｯﾄｹｰｽ * Inlet Case	1	1	
12-1-16	699-31015-0	O ﾘﾝｸﾞ、2-29.5 * O-Ring, 2-29.5	1	1	
12-1-17	910121-7625	ﾎﾞﾙﾄ * Bolt	2	2	
12-1-18	699-31601-2	ｷｬｯﾌﾟ、ｲﾝﾚｯﾄｹｰｽ * Cap, Inlet Case	1	1	
12-1-19	699-31615-0	O ﾘﾝｸﾞ、2-27.5 * O-Ring, 2-27.5	1	1	OUT
12-1-20	151-32001-0	O ﾘﾝｸﾞ、2.25-15.7 * O-Ring, 2.25-15.7	1	1	IN
12-1-21	699-31608-0	ｽﾄﾚｰﾅ * Stringer	1	1	
12-1-22	159-30636-0	ﾗﾊﾞｰ、ｳｵｰﾀｽﾄｯﾌﾟﾊﾞﾙﾌﾞ * Rubber, Water Stop Valve	1	1	
12-1-23	699-31603-0	ﾜｯｼｬ、ｲﾝﾚｯﾄｹｰｽ * Washer, Inlet Case	1	1	
12-1-24	699-31604-0	ｼｬﾌﾄ、ｲﾝﾚｯﾄｹｰｽ * Shaft, Inlet Case	1	1	
12-1-25	699-31605-0	ｽﾌﾟﾘﾝｸﾞ、ｲﾝﾚｯﾄｹｰｽ * Spring, Inlet Case	1	1	
12-1-26	345-66021-0	O ﾘﾝｸﾞ、1.9-6.8 * O-Ring, 1.9-6.8	1	1	
12-1-27	930403-0500	ﾅｲﾛﾝﾅｯﾄ、5P-0.8 * Nylon Nut, 5P-0.8	1	1	
12-1-28	940103-0500	ﾜｯｼｬ * Washer	1	1	

バキュームポンプ

Fig. 12 VACUUM PUMP

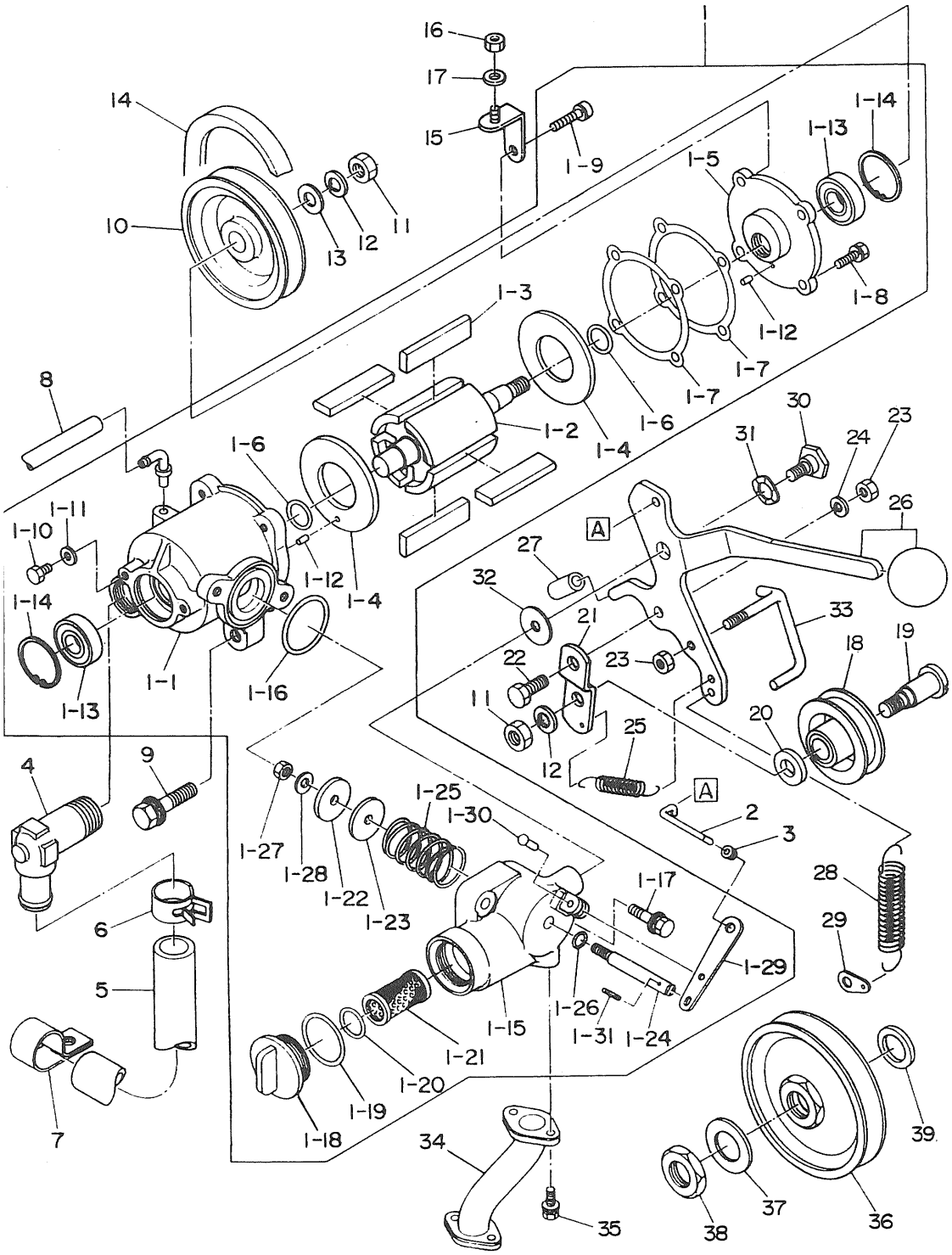

見出番号 Ref. No.	部品番号 Part No.	部　品　名 Description	個数 Q'ty S type	 M type	備　考 Remarks
12-1-29	699-31606-1	レバー、インレットケース * Lever, Inlet Case	1	1	
12-1-30	121-07114-1	リベット * Rivet	1	1	
12-1-31	951503-0215	スプリットピン * Split Pin	1	1	
12-2	699-31607-0	ロッド、インレットケース Rod, Inlet Case	1	1	
12-3	345-05223-1	ロッドスナップ、3.5-2 Rod Snap, 3.5-2	1	1	
12-4	128-31011-0	アウトレットエルボ、VP Outlet Elbow, VP	1	1	
12-5	99AB15-0420	アウトレットホース、VP Outlet Hose, VP	1	1	
12-6	128-31201-1	クリップ、20.8 Clip, 20.8	1	1	
12-7	128-31202-0	クランプ Clamp	1	1	
12-8	98AL-4-0110	ゴムホース Rubber Hose	1	1	
12-9	910121-7835	ボルト Bolt	2	2	
12-10	121-31101-0	Vプーリ V Pulley	1	1	
12-11	930121-0800	ナット Nut	1	1	
12-12	941322-0800	スプリングワッシャ Spring Washer	1	1	
12-13	940121-0800	ワッシャ Washer	1	1	
12-14	9751-1-0026	Vベルト、A-26 V Belt, A-26	1	1	
12-15	634-31304-0	ホルダ、ベルトカバーB Holder, Belt Cover "B"	1	1	
12-16	930121-0500	ナット Nut	1	1	
12-17	940121-0500	ワッシャ Washer	1	1	
12-18	126-31121-0	テンションプーリ Tension Pulley	1	1	
12-19	699-31122-0	シャフト、テンションプーリ Shaft, Tension Pulley	1	1	
12-20	3B7-01116-0	ワッシャ、10.5-20-3.2 Washer, 10.5-20-3.2	1	1	
12-21	105-31136-1	アーム、テンションプーリ Arm, Tension Pulley	1	1	
12-22	105-31137-0	シャフト、テンションハンドル Shaft, Tension Handle	1	1	
12-23	930121-0600	ナット Nut	2	2	
12-24	941322-0600	スプリングワッシャ Spring Washer	1	1	
12-25	128-31138-0	スプリング Spring	1	1	
12-26	699-31131-4	テンションハンドル Tension Handle	1	1	
12-27	98AB-7-0020	ゴムホース Rubber Hose	1	1	
12-28	699-31144-2	スプリング、テンションハンドル Spring, Tension Handle	1	1	

バキュームポンプ
Fig. 12 VACUUM PUMP

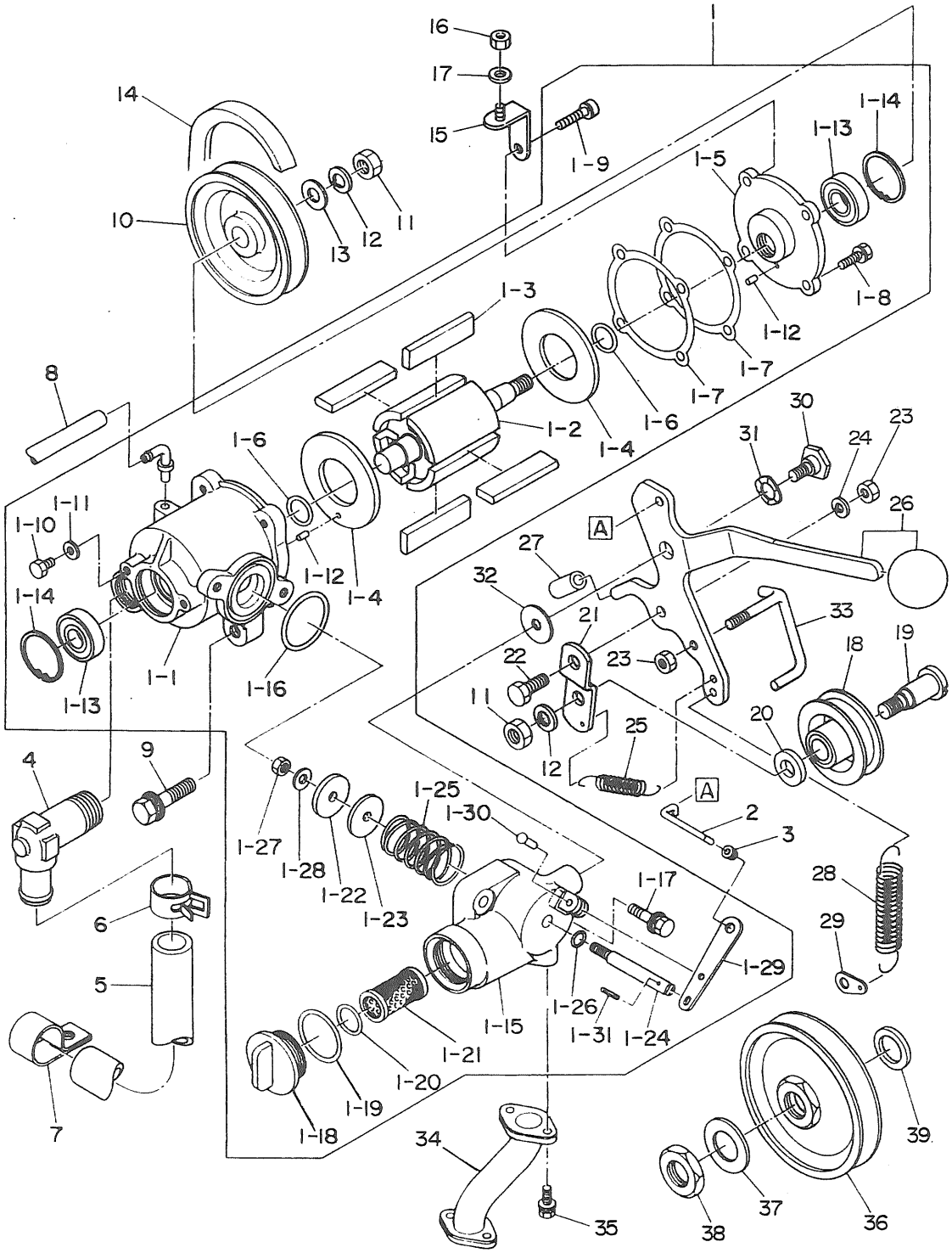

見出番号 Ref. No.	部品番号 Part No.	部　品　名 Description	個数 Q'ty S type	 M type	備　考 Remarks
12-29	151-31354-0	ﾌｯｸﾌﾟﾚｰﾄ、ｽﾌﾟﾘﾝｸﾞ Hook Plate, Spring	1	1	
12-30	699-31145-1	ﾎﾞﾙﾄ、ﾃﾝｼｮﾝﾊﾝﾄﾞﾙ Bolt, Tension Handle	1	1	
12-31	941407-1000	ｳｪｰﾌﾞﾜｯｼｬ、d=10 Wave Washer, d=10	1	1	
12-32	151-32053-0	ﾜｯｼｬ、6-22-1.6 Washer, 6-22-1.6	1	1	
12-33	128-31141-0	ﾍﾞﾙﾄｶﾞｲﾄﾞ Belt Guide	1	1	
12-34	1F2-31240-1	ﾊﾟｲﾌﾟ、ﾊﾞｷｭｰﾑ Pipe, Vacuum	1	1	
12-35	910421-7514	ﾎﾞﾙﾄ Bolt	4	4	
12-36	121-31123-0	ｽﾀｰﾀﾌﾟｰﾘ Starter Pulley	1	1	
12-37	121-31124-0	ﾜｯｼｬ、18-24-2 Washer, 18-24-2	1	1	
12-38	121-31125-0	ﾅｯﾄ、ｽﾀｰﾀﾌﾟｰﾘ Nut, Starter Pulley	1	1	
12-39	121-31126-0	ﾜｯｼｬ、18.3-33-0.5 Washer, 18.3-33-0.5	1	1	

ﾃﾞｨｽﾁｬｰｼﾞﾊﾞﾙﾌﾞ式放水弁

Fig. 13 DISCHRGE VALVE CHAMBER

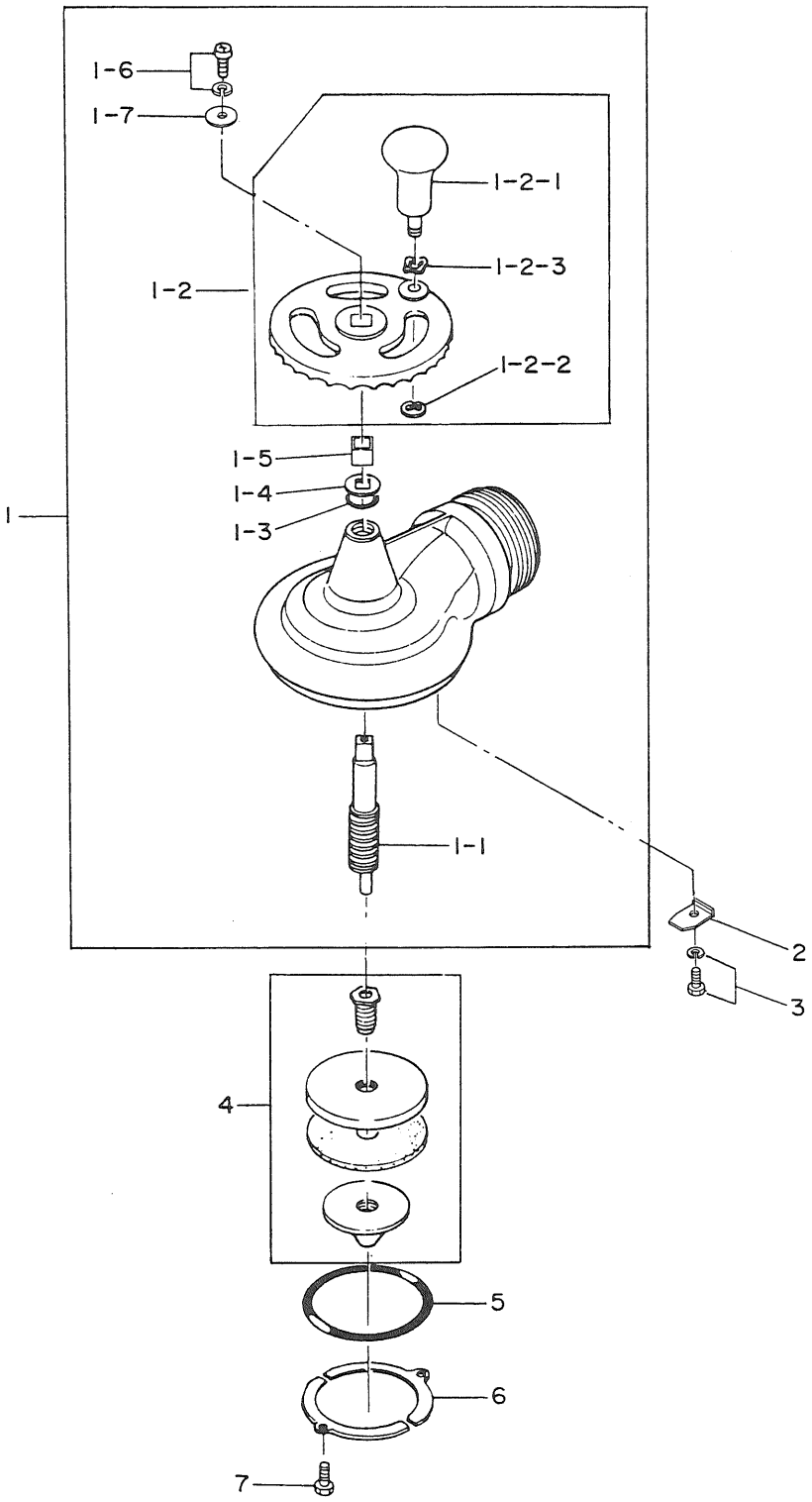

見出番号 Ref. No.	部品番号 Part No.	部　品　名 Description	個数 Q'ty S type	 M type	備　考 Remarks
13-1	121-32000-0	ﾃﾞｨｽﾁｬｰｼﾞﾊﾞﾙﾌﾞﾁｬﾝﾊﾞｱｯｼ Discharge Valve Chamber Ass'y	1	1	
13-1-1	121-32010-0	ｼｬﾌﾄ、ﾃﾞｨｽﾁｬｰｼﾞﾊﾞﾙﾌﾞ * Shaft, Discharge Valve	1	1	
13-1-2	174-32050-0	ﾊﾝﾄﾞﾙｱｯｼ * Handle Ass'y	1	1	
13-1-2-1	174-32051-0	ｸﾞﾘｯﾌﾟ * Grip	1	1	
13-1-2-2	945327-0800	E ﾘﾝｸﾞ、d=8 * E-Ring, d=8	1	1	
13-1-2-3	941407-1000	ｳｴｰﾌﾞﾜｯｼｬ、d=10 * Wave Washer, d=10	1	1	
13-1-3	121-31049-0	O ﾘﾝｸﾞ、2.4-11.8 * O-Ring, 2.4-11.8	1	1	
13-1-4	121-32054-0	ﾜｯｼｬ、D. V. ﾊﾝﾄﾞﾙ * Washer, Discharge Valve Handle	1	1	
13-1-5	121-32055-0	ｶﾗｰ、D. V. ﾊﾝﾄﾞﾙ * Collar, Discharge Valve Handle	1	1	
13-1-6	921521-6616	ｽｸﾘｭ * Screw	1	1	
13-1-7	151-32053-0	ﾜｯｼｬ、6-22-1.6 * Washer, 6-22-1.6	1	1	
13-2	121-32025-0	ｽﾄｯﾊﾟ、D. V. ﾁｬﾝﾊﾞ Stopper, Discharge Valve Chamber	1	1	
13-3	910121-6612	ﾎﾞﾙﾄ Bolt	1	1	
13-4	121-32021-0	ﾃﾞｨｽﾁｬｰｼﾞﾊﾞﾙﾌﾞｱｯｼ Discharge Valve Ass'y	1	1	
13-5	121-32071-0	O ﾘﾝｸﾞ、2.4-59.6 O-Ring, 2.4-59.6	1	1	
13-6	121-32092-0	ｻﾎﾟｰﾀ、D. V. ﾁｬﾝﾊﾞ Supporter, Discharge Valve Chamber	2	2	
13-7	1F1-31129-0	ﾎﾞﾙﾄ Bolt	2	2	

フレーム
Fig. 14 FRAME

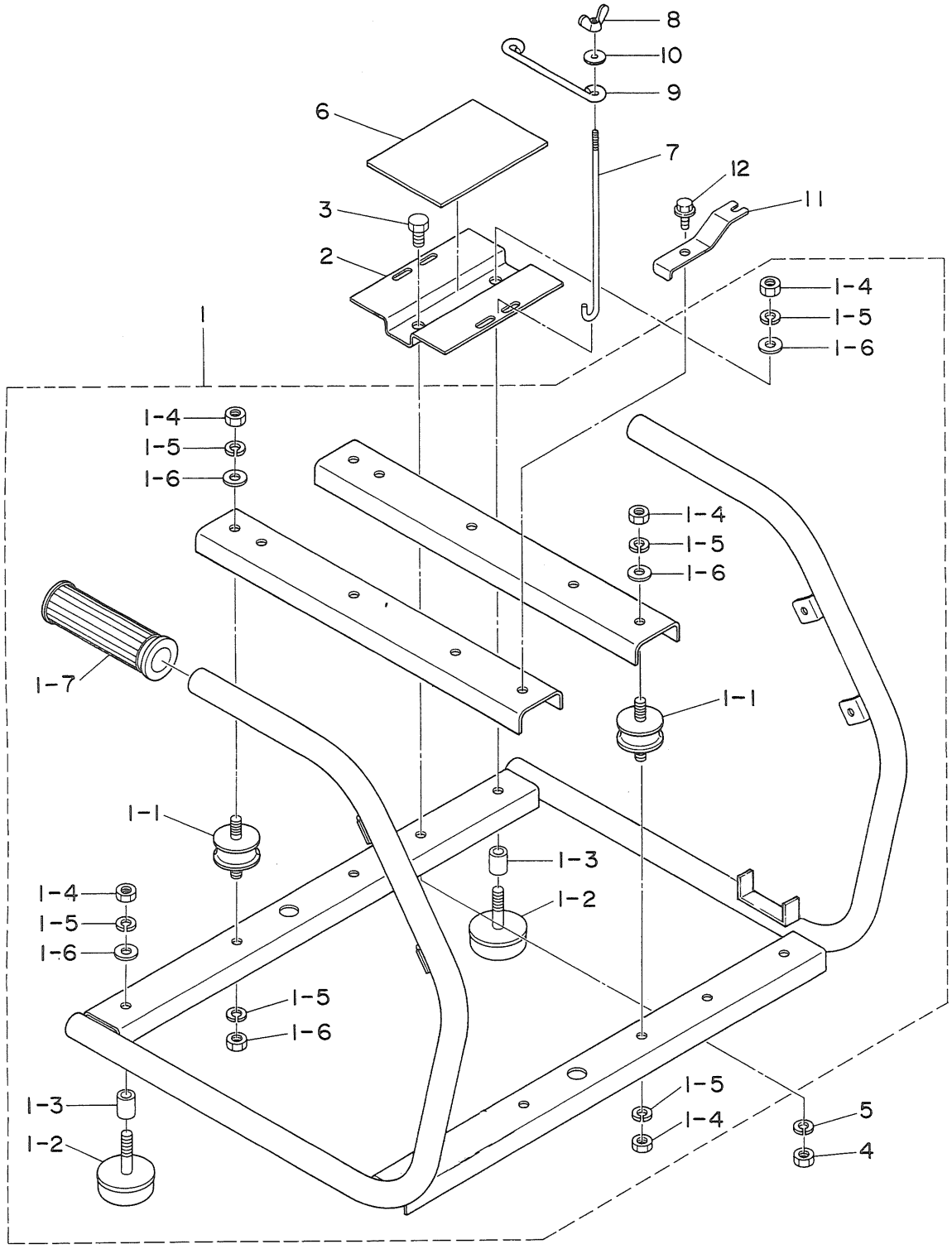

見出番号 Ref. No.	部品番号 Part No.	部　品　名 Description	個数 Q'ty S type	 M type	備　考 Remarks
14-1	1K7-37000-0	ﾌﾚｰﾑｱｯｼ Frame Ass'y	1	1	
14-1-1	1D7-37053-2	ﾀﾞﾝﾊﾟﾗﾊﾞｰ、ｴﾝｼﾞﾝﾍﾞｰｽ * Damper Rubber, Engine Base	4	4	
14-1-2	128-37151-0	ﾀﾞﾝﾊﾟﾗﾊﾞｰ * Damper Rubber	4	4	
14-1-3	128-01762-0	ｶﾗｰ、ﾀﾞﾝﾊﾟﾗﾊﾞｰ * Collar, Damper Rubber	4	4	
14-1-4	930121-0800	ﾅｯﾄ * Nut	12	12	
14-1-5	941322-0800	ｽﾌﾟﾘﾝｸﾞﾜｯｼｬ * Spring Washer	12	12	
14-1-6	940121-0800	ﾜｯｼｬ * Washer	8	8	
14-1-7	175-63012-0	ｸﾞﾘｯﾌﾟ、ｷｬﾘﾝｸﾞﾊﾝﾄﾞﾙ * Grip, Carrying Handle	2	2	
14-2	1F2-36001-0	ｻﾎﾟｰﾄﾌﾟﾚｰﾄ、ﾊﾞｯﾃﾘ Support Plate, Battery	1	—	
14-3	910121-5816	ﾎﾞﾙﾄ Bolt	1	—	
14-4	930121-0800	ﾅｯﾄ Nut	1	—	
14-5	940121-0800	ﾜｯｼｬ Washer	1	—	
14-6	128-36003-0	ﾗﾊﾞｰｼｰﾄ、ﾊﾞｯﾃﾘ Rubber Sheet, Battery	1	—	
14-7	626-36004-1	ｸﾗﾝﾌﾟ、ﾊﾞｯﾃﾘｻﾎﾟｰﾀ Clamp, Battery Supporter	2	—	
14-8	151-36005-0	ｳｲﾝｸﾞﾅｯﾄ、4P-0.7 Wing Nut, 4P-0.7	2	—	
14-9	1F1-36006-0	ｻﾎﾟｰﾀ、ﾊﾞｯﾃﾘ Supporter, Battery	1	—	
14-10	940121-0600	ﾜｯｼｬ Washer	2	—	
14-11	1D7-07448-0	ﾜｲﾔｽﾃｰ B Wire Stay "B"	1	1	
14-12	910121-5812	ﾎﾞﾙﾄ Bolt	1	1	

ラベル

Fig. 15 LABEL

1

OPERATING INSTRUCTION

Before use,
●Please read Owner's Manual sufficiently.
●Close discharge valve.

≪Starting Procedure≫ (For Auto Choke Type Engine)
1) Open fuel cock①.
2) Set throttle dial ② at "START/SUCTION" position.
(Push tickler and make sure over flow when weather is lower than freezing degree.)
3) Turn main switch ③ to "ON" position, and then turn it to "START" position. (Electric type)
Pull recoil starter handle sharply. (Manual type)
4) Pull suction lever ④ up to prime water.
5) Turn to open discharge valve handle ⑤ gradually, when priming completes.
6) Set throttle dial ② at proper pressure position.

≪Stopping Procedure≫
1) Turn throttle dial ② to low pressure position, and then close discharge valve ⑤.
2) Turn main switch ③ to "STOP" position to stop engine. (Electric type)
Keep to push stop switch until engine stops completely. (Manual type)
3) Close fuel cock①.
4) Open drain valve ⑥ and make sure it to close after drain.

1K7-38203-0

2

高圧 HIGH
吸水始動 SUCTION START
スロットル THROTTLE
2
低圧 LOW

3

トーハツ 純正オイル 混合比
OIL MIXTURE RATIO
50:1

4

TOHATSU
Portable Fire Fighting Pump

5 6

3 5

7

閉 CLOSE
1
開 OPEN
燃料 FUEL COCK

8

4
吸水 SUCTION

9

燃料ドレンバルブ FUEL DRAIN VALVE
開(引く)/燃料コックは閉のこと。
OPEN(PULL) / CLOSED FUEL COCK.
⚠ 注意 CAUTION
●ドレンポット内の燃料は直ちに燃料タンクに戻して下さい。
●Return fuel in drainpot to fuel tank immediately

10

3 メインスイッチ MAIN SWITCH
停止 OFF 運転 ON 始動 START

11

STOP 停止
押す PUSH

12

投光器 LIGHT
充電 CHARGE
ヒューズ FUSE

13

投光器 LIGHT

14

⚠ CAUTION
After operating, pull up the VP lever to drain out all remained water inside the VP Inletcase.

15

⚠ WARNING
■Read owner's manual very carefully before operating this motor. Give special attention to safety cautions.
■Never remove or replace the motor cover while the engine is running. (Only for VC series models.)
■Check oil level before starting. (Only for VC series models.)
■Unleaded fuel only.
■May cause fire and explosion.
- Do not smoke or use open fire near the fuel system.
- Stop the engine before filling the fuel tank.
- Do not spill fuel.

⚠ CAUTION
■May cause injury of ears.
- Always use ear protectors when operating the engine.
■Exhaust gas may damage your health.
- Only operate the engine in well-ventilated surroundings.

16

⚠ WARNING
■High Voltage : Never touch any electrical parts while the engine is running.

⚠ CAUTION
■Do not touch engine when in operation, and / or immediately upon shut down. It may cause severe injury to you.

17

⚠ WARNING
■Never touch rotating parts while the engine is running. Severe personal injury will occur.

見出番号 Ref. No.	部品番号 Part No.	部　品　名 Description	個数 Q'ty S type	 M type	備　考 Remarks
15-1	1K7-38203-0	ﾗﾍﾞﾙ、ｲﾝｽﾄﾗｸｼｮﾝ Label, Instruction	1	1	for Ex.
15-2	1D7-38105-2	ﾗﾍﾞﾙ、ｽﾛｯﾄﾙ Label, Throttle	1	1	
15-3	1D7-38174-0	ﾗﾍﾞﾙ、ﾐｯｸｽ Label, Mixture	1	1	
15-4	1D7-38171-0	ﾗﾍﾞﾙ、TOHATSU Label, TOHATSU	1	1	
15-5	1D7-38163-0	ﾗﾍﾞﾙ、ｺﾝﾄﾛｰﾙ 3 Label, Control 3	—	1	
15-6	1D7-38165-0	ﾗﾍﾞﾙ、ｺﾝﾄﾛｰﾙ 5 Label, Control 5	1	1	
15-7	1D7-38146-0	ﾗﾍﾞﾙ、ﾌｭｴﾙｺｯｸ Label, Fuel Cock	1	1	
15-8	1D7-38231-0	ﾗﾍﾞﾙ、ｻｸｼｮﾝﾚﾊﾞｰ Label, Suction Lever	1	1	
15-9	180-38017-1	ﾗﾍﾞﾙ、ﾄﾞﾚﾝﾊﾞﾙﾌﾞ Label, Drain Valve	1	1	
15-10	1D7-38008-0	ﾗﾍﾞﾙ、ﾒｲﾝｽｲｯﾁ Label, Main Switch	1	—	
15-11	1D7-38112-0	ﾗﾍﾞﾙ、ｽﾄｯﾌﾟｽｲｯﾁ Label, Stop Switch	—	1	
15-12	1D7-38003-0	ﾗﾍﾞﾙ、ｵﾍﾟﾚｰｼｮﾝ Label, Operation	1	—	
15-13	1D7-38004-0	ﾗﾍﾞﾙ、ﾗｲﾄ Label, Light	—	1	
15-14	1D7-38236-0	ﾗﾍﾞﾙ、ｵｲﾙﾚｽ VP ｺｰｼｮﾝ Label, Oil Less “VP” Caution	1	1	
15-15	1E0-38506-0	ﾗﾍﾞﾙ、ｺｰｼｮﾝ A Label, Caution “A”	1	1	
15-16	1E0-38507-0	ﾗﾍﾞﾙ、ｺｰｼｮﾝ B Label, Caution “B”	1	1	
15-17	1E0-38508-0	ﾗﾍﾞﾙ、ｺｰｼｮﾝ C Label, Caution “C”	1	1	

付属品
Fig. 16 ATTACHMENTS

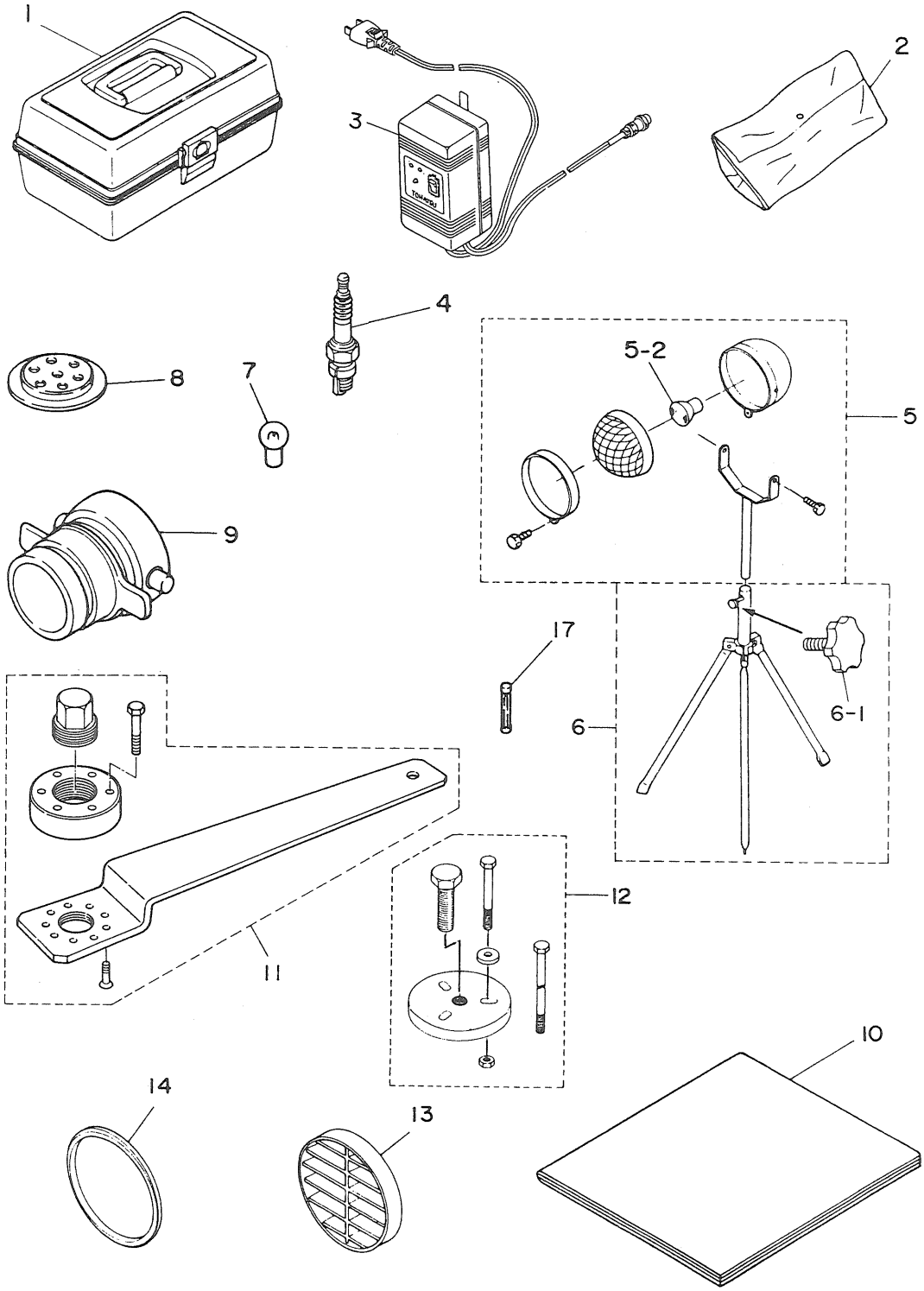

見出番号 Ref. No.	部品番号 Part No.	部　品　名 Description	個数 Q'ty S type	 M type	備　考 Remarks
16-1	159-39001-1	ﾂｰﾙﾎﾞｯｸｽ Tool Box	1	1	Option
16-2	151-39010-2	ﾂｰﾙｷｯﾄ Tool Kit	1	1	
16-3	159-39034-3	ｵｰﾄﾊﾞｯﾃﾘﾁｬｰｼﾞｬ (110V) Auto Battery Charger (110V)	1	—	
	159-39039-3	ｵｰﾄﾊﾞｯﾃﾘﾁｬｰｼﾞｬ (240V) Auto Battery Charger (240V)	1	—	
16-4	9701-1-1004	ｽﾊﾟｰｸﾌﾟﾗｸﾞ Spark Plug	1	1	NGK B7HS
16-5	181-39020-1	ﾗｲﾄｱｯｼ Light Ass'y	1	1	Option
16-5-1	151-39021-0	ﾊﾞﾙﾌﾞ、12V35W * Bulb, 12V35W	1	1	Option
16-6	151-39022-0	ﾄﾘﾎﾟｯﾄﾞ Tripod	1	1	Option
16-6-1	3B2-63034-0	ｱｼﾞｬｽﾄｽｸﾘｭ * Adjust Screw	1	1	Option
16-7	159-34321-0	ﾊﾞﾙﾌﾞ、3.4W Bulb, 3.4W	1	1	Option
16-8	121-39045-0	ﾌﾟﾚｰﾄ、ﾎﾟﾝﾋﾟﾝｸﾞ Plate, Pumping	1	1	
16-9	151-39051-0	ｶｯﾌﾟﾘﾝｸﾞ、ﾃﾞｨｽﾁｬｰｼﾞﾎﾟｰﾄ Coupling, Discharge Port	1	1	Option
16-10	1D7-39201-0	ﾋﾞﾆｰﾙｶﾊﾞｰ Vinyl Cover	1	1	Option .
16-11	1A6-39115-0	ﾏｸﾞﾈﾄﾌﾟｰﾗ Flywheel Magneto Puller	1	1	Option
16-12	126-39100-0	ﾌﾟｰﾗ (ｲﾝﾍﾟﾗ、V ﾌﾟｰﾘ) Puller (Impeller, V-Puller)	1	1	Option
16-13	128-30151-0	ｻｸｼｮﾝﾎｰｽｽﾄﾚｰﾅ Suction Hose Strainer	1	1	
16-14	128-30152-0	ｽﾄｯﾊﾟ、ｽﾄﾚｰﾅ Stopper, Strainer	1	1	Option
16-15	159-39042-0	ﾋｭｰｽﾞ、5A Fuse, 5A	1	—	

Copyright © 2007 Tohatsu Corporation. All rights reserved. No part of this manual may be reproduced or transmitted in any from or by any means without the express written permission of Tohatsu Corporation.

営業品目

- 可搬消防ポンプ
- 防災システム
- ジェットポンプ・揚水ポンプ
- 船外機
- 和船
- 輸送用冷凍装置

トーハツ株式会社

防災	営業部	〒174-0051	東京都板橋区小豆沢3-5-4	TEL 03(3966)3115(代表)	FAX 03(3966)2951
防災	九州	〒816-0092	福岡市博多区東那珂2-10-55	TEL 092(411)8770(代表)	FAX 092(411)8790
防災	関西	〒530-0043	大阪市北区天満1-8-27	TEL 06(6358)2971(代表)	FAX 06(6358)3176
防災	中部	〒530-0043	大阪市北区天満1-8-27	TEL 06(6358)2971(代表)	FAX 06(6358)3176
防災	豊橋	〒440-0802	豊橋市御園町7-12	TEL 0532(54)5551(代表)	FAX 0532(54)5552
防災	中央	〒174-0051	東京都板橋区小豆沢3-5-4	TEL 03(3966)3115(代表)	FAX 03(3966)2951
防災	東北	〒981-1106	仙台市太白区柳生2-23-1	TEL 022(306)9131(代表)	FAX 022(306)9134
防災	北海道	〒060-0031	札幌市中央区北一条東11-22-41	TEL 011(241)8301(代表)	FAX 011(241)8303

Printed in Japan